SUPPORTI
INSERT BEARING

Il cuscinetto sferico esterno è in realtà una variante del cuscinetto a sfere tradizionale. La sua superficie esterna è semi-sferica e può essere inserita nella corrispondente superficie del supporto per svolgere il ruolo di centraggio statico.
Il cuscinetto sferico esterno è utilizzato esclusivamente per sopportare carichi radiali o combinati e non è adatto a sopportare il solo carico assiale.

The outer spherical ball bearing is actually a variant of the deep groove ball bearing. Its outer diameter surface is spherical, which can be fitted into the corresponding concave spherical surface of the bearing seat to play the role of centenng. The outer spherical bearing ís rnainly used to bear the combined radiai and axial load, and it is not suitable to bear the axial load alone.

Supporti auto-allineanti

SUPPORTI
INSERT BEARING

CUSCINETTO CON ALLOGGIAMENTO
INSERT BEARING WITH HOUSING

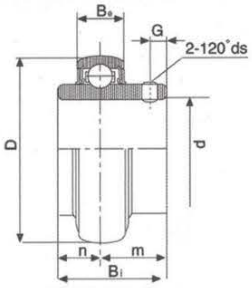

• UC200 (Light Duty)
Spherical O.D.

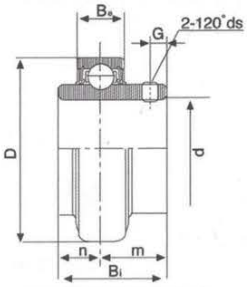

• UR / CUC200 (Light Duty)
Cylindrical O.D.

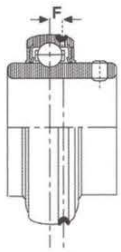

• UC200G
Relubricatable type

SL TYPE SEAL

TJ TYPE SEAL

Bearing No	Shaft Dia d (in)	Shaft Dia d (mm)	Dimensions(mm) D	Bi	Be	n	m	G	ds (mm)	ds (in.UNF)	F	Basic dynamie Load ratings (KN)	Basic static Load ratings (KN)	Weight (kg)
UCW201		12	40	27.4	14	11.5	15.9	4.2	M5x0.8		4.1	7.36	4.48	0.12
UCW201-8	1/2									1/4-28				
UCW202		15	40	27.4	14	11.5	15.9	4.2	M5x0.8		4.1	7.36	4.48	0.11
UCW202-9	9/16									1/4-28				
UCW202-10	5/8									1/4-28				
UCW203		17	40	27.4	14	11.5	15.9	4.2	M5x0.8		4.1	7.36	4.48	0.10
UCW203-11	11/16									1/4-28				
UC201		12	47	31	17	12.7	18.3	5	M6x1		4.3	9.88	6.20	0.21
UC201-8	1/2									1/4-28				
UC202		15	47	31	17	12.7	18.3	5	M6x1		4.3	9.88	6.20	0.19
UC202-9	9/16									1/4-28				
UC202-10	5/8									1/4-28				
UC203		17	47	31	17	12.7	18.3	5	M6x1		4.3	9.88	6.20	0.18
UC203-11	11/16									1/4-28				0.19
UC204		20	47	31	17	12.7	18.3	5	M6x1		4.3	9.88	6.20	0.17
204-12	3/4									1-4/28				0.18
UC205		25	52	34.1	17	14.3	19.8	5.4	M6x1	1/4-28	4	10.78	6.98	0.19
205-14	7/8													0.22
205-15	15/16													0.20
205-16	1													0.19
UC206		30	62	38.1	19	15.9	22.2	5.5	M6x1	1/4-28	5.3	14.97	10.04	0.31
206-17	1-1/16													0.33
206-18	1-1/8													0.34
206-19	1-3/16													0.32
206-20	1-1/4													0.30
UC207		35	72	42.9	20	17.5	25.4	6.9	M8x1	5/16-24	5.8	19.75	13.67	0.46
207-20	1-1/4													0.52
207-21	1-5/16													0.51
207-22	1-3/8													0.48
207-23	1-7/16													0.46
UC208		40	80	49.2	21	19.0	30.2	8	M8x1	5/16-24	6.2	22.71	15.94	0.63
208-24	1-1/2													0.68
208-25	1-9/16													0.64
UC209		45	85	49.2	22	19.0	30.2	8	M8x1	5/16-24	6.5	24.36	17.71	0.68
209-26	1-5/8													0.78
209-27	1-11/16													0.74
209-28	1-3/4													0.70
UC210		50	90	51.6	24	19.0	32.6	10	M10x1.25	3/8-24	7	26.98	19.84	0.78
210-30	1-7/8													0.85
210-31	1-15/16													0.80
210-32	2													0.78
UC211		55	100	55.6	25	22.2	33.4	10	M10x1.25	3/8-24	7.4	33.37	25.11	1.07
211-32	2													1.22
211-34	2-1/8													1.10
211-35	2-3/16													1.05
UC212		60	110	65.1	27	25.4	39.7	10	M10x1.25	3/8-24	7.6	36.74	27.97	1.51
212-36	2-1/4													1.65
212-38	2-3/8													1.52
212-39	2-7/16													1.42
UC213		65	120	65.1	28	25.4	39.7	10	M10x1.25	3/8-24	8.5	44.01	34.18	1.86
213-39	2-7/16													1.96
213-40	2-1/2													1.94
UC214		70	125	74.6	29	30.2	44.4	12	M12x1.25	7/16-20	8.9	46.79	37.59	2.18
214-43	2-11/16													2.28
214-44	2-3/4													2.06
UC215		75	130	77.8	30	33.3	44.5	12	M12x1.25	7/16-20	9.2	50.85	41.26	2.21
215-47	2-15/16													2.30
215-46	3													2.13
UC216		80	140	82.6	33	33.3	49.3	12	M12x1.25	7/16-20	9.5	55.04	45.09	2.79
UC217		85	150	85.7	35	34.1	51.6	12	M12x1.25	7/16-20	11.1	64.01	53.28	3.38
217-52	3-1/4													3.59
UC218		90	160	96	37	39.7	56.3	12	M12x1.25	1/2-20	11.8	73.83	60.76	4.46
218-56	3-1/2													4.56

Supporti auto-allineanti

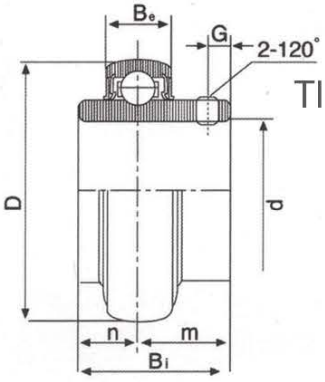

•UC300

TIPOLOGIE DI GUARNIZIONI/TENUTE

SL TYPE SEAL

TJ TYPE SEAL

L3 TYPE SEAL

UC300 Series

Unit No.	Shaft Dia d	(mm)	Dimensions (mm) D	Bi	Be	n	m	G	ds	Basic Load Dynamic Cr	Rating KN Static Cor	Weight kg
UC305-14 305-15 305 305-16	7/8 15/16 1	25	62	38	21	15	23	6	M6X1	17.22	11.39	0.44
UC306-18 306 306-19	1-1/8 1-3/16	30	72	43	23	17	26	6	M6X1	20.77	14.17	0.56
UC307-20 307-21 307-22 307	1-1/4 1-5/16 1-3/8	35	80	48	25	19	29	8	M8X1	25.66	17.92	0.71
UC308-24 308-25 308	1-1/2 1-9/16	40	90	52	27	19	33	10	M10X1.25	31.35	22.38	1.00
UC309-26 309-27 309-28 309	1-5/6 1-11/16 1-3/4	45	100	57	30	22	35	10	M10X1.25	40.66	30	1.28
UC310-30 310-31 310	1-7/8 1-15/16	50	110	61	32	22	39	12	M12X1.25	47.58	35.71	1.65
UC311-32 311-34 311 311-35	2 2-1/8 2-3/16	55	120	66	34	25	41	12	M12X1.25	55.05	41.91	2.07
UC312-36 312 312-38 312-39	2-1/4 2-3/8 2-7/16	60	130	71	36	26	45	12	M12X1.25	62.88	48.6	2.59
UC313-40 313	2-1/2	65	140	75	38	30	45	12	M12X1.25	72.21	56.68	3.15
UC314-44 314	2-3/4	70	150	78	40	33	45	12	M12X1.25	80.1	63.48	3.83
UC315 315-48	3	75	160	62	42	32	50	14	M14X1.5	87.25	71.67	4.59
UC316		80	170	86	44	34	52	14	M14X1.5	94.57	80.35	5.40
UC317-52 317	3-1/4	85	180	96	46	40	56	16	M16X1.5	102.05	89.52	6.58
UC318-56 318	3-1/2	90	190	96	48	40	56	16	M16X1.5	110.81	100.76	7.34
UC319 319-60	3-3/4	95	200	103	50	41	62	16	M16X1.5	120.51	113.75	8.70
UC320 320-64	4	100	215	108	54	42	66	18	M18X1.5	133.06	131.18	10.80
UC321		105	225	112	56	44	68	18	M18X1.5	141.30	142.84	12.20
UC322		110	240	117	60	46	71	18	M18X1.5	157.66	167.64	14.30
UC324		120	260	126	64	51	75	18	M18X1.5	175.07	194.42	18.50
UC326		130	280	135	68	54	81	20	M20X1.5	194.93	226.71	23.00
UC328		140	300	145	72	59	86	20	M20X1.5	211.38	253.93	28.50

CUSCINETTO CON ALLOGGIAMENTO
INSERT BEARING WITH HOUSING

UEL200 SERIE

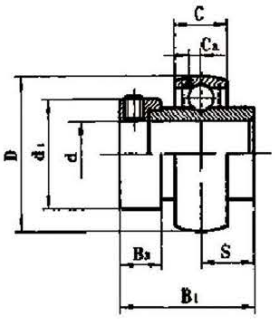

Cusci-netto	Dimensioni (mm)										Peso kg
	d	D	B1	B	B2	S	C	D1	G	DS	
UEL201	12	40	37.3	27.8	13.5	13.9	15	28.6	4.8	M6X1	0.26
UEL202	15	40	37.3	27.8	13.5	13.9	15	28.6	4.8	M6X1	0.23
UEL203	17	40	37.3	27.8	13.5	13.9	15	28.6	4.8	M6X1	0.21
UEL204	20	47	43.7	34.2	13.5	17.1	17	33.3	4.8	M6X1	0.18
UEL205	25	52	44.4	34.9	13.5	17.5	17	38.1	4.8	M6X1	0.25
UEL206	30	62	48.4	36.5	15.9	18.3	19	44.5	6	M6X1	0.4
UEL207	35	72	51.1	37.6	17.5	18.8	20	55.6	6.8	M8X1	0.61
UEL208	40	80	56.3	42.8	18.3	21.4	21	60.3	6.8	M8X1	0.75
UEL209	45	85	56.3	42.8	18.3	21.4	22	63.5	6.8	M8X1	0.81
UEL210	50	90	62.7	49.2	18.3	24.6	24	69.9	7	M10X1	0.98
UEL211	55	100	71.4	55.5	20.7	27.8	25	76.2	7	M10X1	1.3
UEL212	60	110	77.8	61.9	22.3	31	27	84.2	8	M10X1	1.78
UEL213	65	120	85.7	69.2	23.5	34.1	27	86	8.5	M12X1.5	2.48
UEL214	70	125	85.7	69.2	23.5	34.1	29	90	8.5	M12X1.5	2.5
UEL215	75	130	92.1	76.6	23.5	37.3	30	102	8.5	M12X1.5	2.86
UEL216	80	140	92	70	30	33.3	33	110	11	M12X1.5	3.3

Supporti auto-allineanti

UEL300 SERIE

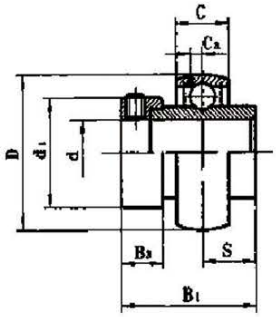

Cusci-netto	Dimensioni (mm)										Peso kg
	d	D	B1	B	B2	S	C	D1	G	DS	
UEL305	25	62	46.8	34.9	15.9	16.7	21	42	6	M6X1	0.43
UEL306	30	72	50	36.5	17.5	17.5	23	49	6.5	M8X1	0.69
UEL307	35	80	51.6	38.1	17.5	18.3	25	55	6.5	M8X1	0.8
UEL308	40	90	57.1	41.5	20.6	19.8	27	63.5	8	M10X1	1.08
UEL309	45	100	58.7	43.1	20.6	19.8	30	70	8	M10X1	1.45
UEL310	50	110	66.6	49.4	22.2	24.6	32	76	9	M12X1.25	1.86
UEL311	55	120	73	55.8	22.2	27.8	34	82	9	M12X1.25	2.34
UEL312	60	130	79.4	61.5	23.9	30.95	36	88	9	M12X1.25	2.94
UEL313	65	140	85.7	64.7	27	32.55	38	95	10	M12X1.25	3.67
UEL314	70	150	92.1	67.9	30.2	34.15	40	102	12.5	M12X1.25	4.4
UEL315	75	160	100	74.2	31.8	37.3	42	110	12.5	M12X1.25	5.34
UEL316	80	170	106.4	80.6	31.8	40.5	44	117	12.5	M12X1.25	6.7
UEL317	85	180	109.5	83.7	31.8	42.05	46	126	12.5	M16X1.5	8
UEL318	90	190	115.9	87.4	36.5	43.65	48	133	14	M16X1.5	9.1
UEL319	95	200	122.3	93.8	36.5	38.9	50	140	14	M16X1.5	10.4
UEL320	100	215	128.6	100.1	36.5	50	54	146	14	M16X1.5	13
UEL321	105	225	139.7	104.8	42.8	48.4	56	157	16	M20X1.5	14.6
UEL322	110	240	142	110	40	55	60	160	16	M20X1.5	17.2

UK200 SERIE

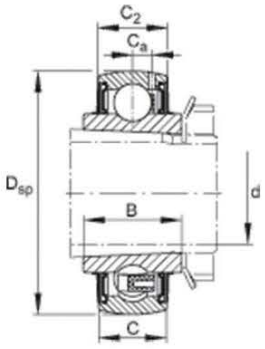

Cusci-netto	Dimensioni (mm)					Peso kg
	d	D	B	S	C	
UK205	25	52	26	13	17	0.16
UK206	30	62	28	14	19	0.24
UK207	35	72	30	15	20	0.4
UK208	40	80	31	15.5	21	0.53
UK209	45	85	33	16.5	22	0.55
UK210	50	90	35	17.5	24	0.62
UK211	55	100	39	19.5	25	0.85
UK212	60	110	41	20.5	27	1.13
UK213	65	120	41.5	20.75	27	1.46
UK215	75	130	44	22	30	1.53
UK216	80	140	48	24	33	1.98
UK217	85	150	50	25	36	2.51
UK218	90	160	51	25.5	37	3.07

Supporti auto-allineanti

UK300 SERIE

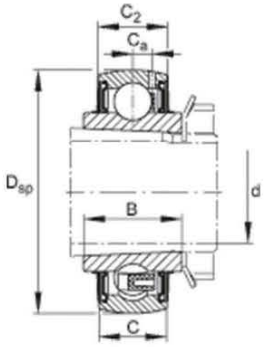

Cusci-netto	Dimensioni (mm)					Peso kg
	d	D	B	S	C	
UK305	25	62	27	13.5	21	0.27
UK306	30	72	30	15	23	0.47
UK307	35	80	34	17	25	0.58
UK308	40	90	36	18	27	0.81
UK309	45	100	39	19.5	30	1.1
UK310	50	110	42	21	32	1.33
UK311	55	120	44	22	34	1.65
UK312	60	130	48	24	36	2.07
UK313	65	140	49	24.5	38	2.54
UK315	75	160	56	28	42	3.81
UK316	80	170	58	29	44	4.5
UK317	85	180	61	30.5	46	5.3
UK318	90	190	66	33	48	6.2
UK319	95	200	67	33.5	50	7.16
UK320	100	215	74	37	54	8.97
UK322	110	240	82	41	60	12.19
UK324	120	260	86	43	64	14.91
UK326	130	280	90	45	68	18.85
UK328	140	300	95	47.5	73	23.45

CUSCINETTO CON ALLOGGIAMENTO
INSERT BEARING WITH HOUSING

SA200 SERIE

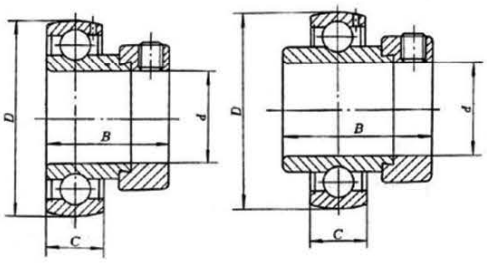

Cuscinetto		Dimensioni (mm)										Peso kg
		d	D	B1	B	B2	S	C	D1	G	DS	
SA201		12	40	28.6	19	13.5	6.5	13	28.6	4.8	M6X1	0.14
SA202		15	40	28.6	19	13.5	6.5	13	28.6	4.8	M6X1	0.13
SA203		17	40	28.6	19	13.5	6.5	13	28.6	4.8	M6X1	0.12
SA204		20	47	31	21.5	13.5	7.5	14	33.3	4.8	M6X1	0.14
SA205		25	52	31	21.5	13.5	7.5	15	38.1	4.8	M6X1	0.18
SA206		30	62	35.7	23.8	15.9	9	16	44.5	6	M6X1	0.31
SA207		35	72	38.9	25.4	17.5	9.5	17	55.6	6.8	M8X1	0.51
SA208		40	80	43.7	30.2	18.3	11	18	60.3	6.8	M8X1	0.64
SA209		45	85	43.7	30.2	18.3	11	19	63.5	6.8	M8X1	0.68
SA210		50	90	43.7	30.2	18.3	11	20	69.9	7	M10X1	0.77
SA211		55	100	48.4	32.5	20.7	12	24	76.2	7	M10X1	0.83
SA212		60	110	53.1	37.2	22.3	13.5	24	84.2	8	M10X1	1.4

Supporti auto-allineanti

SB200 SERIE

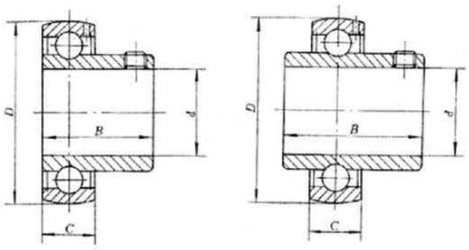

Cuscinetto		Dimensioni (mm)								Peso kg
		d	D	B	S	C	G	R(min)	ds	
SB201		12	40	22	6	12	4.5	0.6	M5X0.5	12
SB202		15	40	22	6	12	4.5	0.6	M5X0.5	15
SB203		17	40	22	6	12	4.5	0.6	M5X0.5	17
SB204		20	47	25	7	14	4.5	1	M6X1	20
SB205		25	52	27	7.5	15	5	1	M6X1	25
SB206		30	62	30	8	16	5	1	M6X1	30
SB207		35	72	32	8.5	17	6	1.1	M8X1	35
SB208		40	80	34	9	18	8	1.1	M8X1	40

CUSCINETTO CON ALLOGGIAMENTO
INSERT BEARING WITH HOUSING

UCP 200 (normal–duty) versione standard

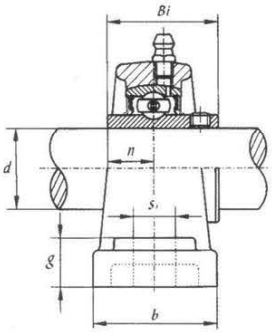

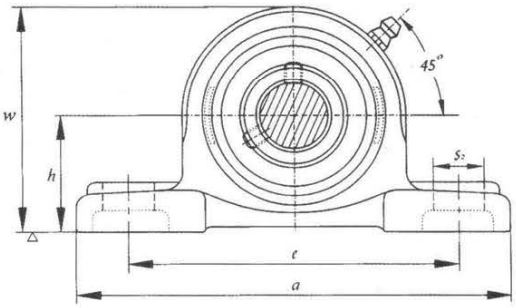

Bearing Unit No.	Shaft Dia. d (in.)	Shaft Dia. d (mm)	Dimensions (in.)or(mm) h	a	e	b	S_2	S_1	g	w	Bi	n	Bolt Used (mm)	Bolt Used (in.)	Bearing No.	Housing No.	Weight (kg)
UCP 201		12	1 3/16	5	3 25/32	1 1/2	3/4	1 / 2	19/32	2 7/16	1.2205	0.5000	M10	3/8	UC 201	P 201	0.63
201-8	1 / 2		30.2	127	96	38	19	13	15	62	31.0	12.7			201-8		
UCP 202		15	1 3/16	5	3 25/32	1 1/2	3/4	1 / 2	19/32	2 7/16	1.2205	0.5000	M10	3/8	UC 202	P 202	0.63
202-10	5/8		30.2	127	96	38	19	13	15	62	31.0	12.7			202-10		
UCP 203		17	1 3/16	5	3 25/32	1 1/2	3/4	1 / 2	19/32	2 7/16	1.2205	0.5000	M10	3/8	UC 203	P 203	0.63
203-11	11/16		30.2	127	96	38	19	13	15	62	31.0	12.7			203-11		
UCP 204-12	3/4	20	1 5/16	5	3 25/32	1 1/2	3/4	1 / 2	19/32	2 9/16	1.2205	0.5000	M10	3/8	UC 204-12	P 204	0.65
204			33.3	127	96	38	19	13	15	65	31.0	12.7			204		
UCP 205-14	7/8														UC 205-14		
205-15	15/16		1 7/16	5 1/2	4 1/8	1 1/2	3/4	1 / 2	5/8	2 3/4	1.3386	0.5630	M10	3/8	205-15	P 205	0.79
205	1	25	36.5	140	105	38	19	13	16	70	34	14.3			205		
205-16															205-16		
UCP 206-18	1 1/8														UC 206-18		
206		30	1 11/16	6 1/2	4 3/4	1 7/8	13/16	21/32	45/64	3 17/64	1.5000	0.6260	M14	1 /2	206	P 206	1.15
206-19	1 3/16		42.9	165	121	48									206-19		
206-20	1 1/4						21	17	18	83	38.1	15.9			206-20		
UCP 207-20	1 1/4														UC 207-20		
207-21	1 5/16		1 7/8	6 37/64	4 31/32	1 7/8	13/16	21/32	3/4	3 5/8	1.6890	0.6890	M14	1 /2	207-21		
207-22	1 3/8			167	126	48	21	17	19	92	42.9	17.5			207-22	P 207	1.60
207		35	47.6												207		
207-23	1 7/16														207-23		
UCP 208-24	1 1/2		1 15/16	7 1/4	5 23/64	2 1/8	13/16	21/32	3/4	3 27/32	1.9370	0.7480			UC 208-24		
208-25	1 9/16												M14	1 /2	208-25	P 208	2.00
208		40	49.2	184	136	54	21	17	19	98	49.2	19			208		
UCP 209-26	1 5/8		2 1/8	7 15/32	5 3/4	2 1/8	13/16	21/32	25/64	4 3/16	1.9370	0.7480			UC 209-26		
209-27	1 11/16												M14	1 /2	209-27	P 209	2.20
209-28	1 3/4		54.0	190	146	54	21	17	20	106	49.2	19			209-28		
209		45													209		
UCP 210-30	1 7/8		2 1/4	8 1/8	6 1/4	2 3/8	1	25/32	7/8	4 13/32	2.0315	0.7480			UC 210-30		
210-31	1 15/16												M16	5/8	210-31	P 210	2.80
210			57.2	206	159	60	25	20	22	112	51.6	19			210		
210-32	2	50													210-32		
UCP 211-32	2		2 1/2	8 5/8	6 23/32	2 3/8	1	25/32	7/8	4 31/64	2.1890	0.8740			UC 211-32		
211-34	2 1/8												M16	5/8	211-34	P 211	3.40
211		55	63.5	219	171	60	25	20	22	126	55.6	22.2			211		
211-35	2 3/16														211-35		
UCP 212-36	2 1/4		2 3/4	9 1/2	7 1/4	2 3/4	1	25/32	1	5 25/64	2.5630	1.0000			UC 212-36		
212		60											M16	5/8	212	P 212	4.80
212-38	2 1/8		69.8	241	184	70	25	20	25	137	65.1	25.4			212-38		
212-39	2 7/16														212-39		
UCP 213-40	2 1/2		3	10 7/16	8	2 3/4	1 9/34	1	1 1/16	5 29/32	2.5630	1.0000	M20	3/4	UC 213-40	P 213	5.70
213		65	76.2	265	203	70	29	25	27	150	65.1	25.4			213		
UCP 214-44	2 3/4		3 1/8	10 15/32	8 9/32	2 27/32	1 7/32	1	1 1/16	6 5/32	2.9370	1.1890	M20	3/4	UC 214-44	P 214	7.00
214		70	79.4	266	210	72	31	25	27	156	74.6	30.2			214		
UCP 215		75	3 1/4	10 13/16	8 17/32	2 29/32	1 7/32	1	1 3/32	6.4173	3.0630	1.3110			UC 215		
215-47	2 15/16												M20	3/4	215-47	P 215	7.60
215-48	3		82.6	275	217	74	31	25	28	163	77.8	33.3			215-48		
UCP 216		80	3 1/2	11 1/2	9 1/8	3 1/16	1 7/32	1	1 3/16	6.8898	3.2520	1.3110	M20	3/4	UC 216	P 216	9.00
216-50	3 1/8		88.9	292	232	78	31	25	30	175	82.6	33.3			216-50		
UCP 217-52	3 1/4		3 3/4	12 7/32	9 23/32	3 9/32	1 7/32	1	1 1/4	7.3622	3.3740	1.3425			UC 217-52		
217		85		310	247	83	31	25	32	187	85.7	34.1	M20	3/4	217	P 217	11.50
217-55	3 7/16		95.2												217-55		
UCP 218-56	3 1/2		4	12 7/8	10 5/16	3 15/32	1 19/64	1 1/16	1 11/32	7.8740	3.7795	1.5630	M22	7/8	UC 218-56	P 218	14.30
218		90	101.6	327	262	88	33	27	34	200	96.0	39.7			218		

Supporti auto-allineanti

UCP 300 (heavy–duty) versione pesante

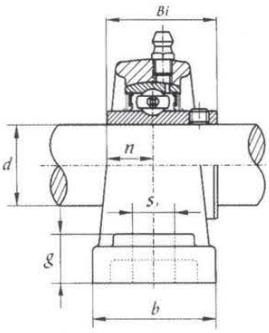

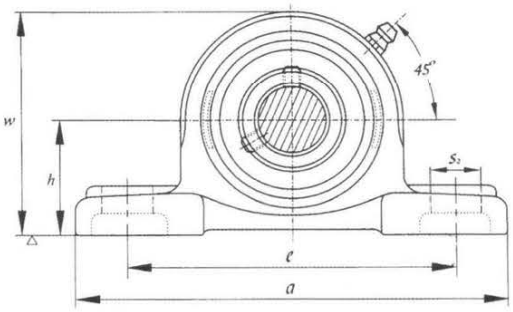

Bearing Unit No.	Shaft Dia. d (in.)	Shaft Dia. d (mm)	Dimensions (in.)or(mm) h	a	e	b	S_2	S_1	g	w	Bi	n	Bolt Used (mm)	Bolt Used (in.)	Bearing No.	Housing No.	Weight (kg)
UCP 305		25	1 49/64	6 7/8	5 3/16	1 3/4	25/32	21/32	5/8	3 11/32	1.4961	0.5906			UC 305		
305-14	7/8												M14	1 /2	305-14	P 305	1.6
305-16	1		45	175	132	45	20	17	16	85	38	15			305-16		
UCP 306-18	1 1/8		1 31/32	7 3/32	5 1/2	1 31/32	25/32	21/32	45/64	3 3/4	1.6929	0.6693			UC 306-18		
306		30											M14	1 /2	306	P 306	2.1
306-19	1 3/16		50	180	140	50	20	17	18	95	43	17			306-19		
UCP 307-20	1 1/4		2 13/64	8 9/32	6 5/16	2 7/32	1	21/32	25/32	4 11/64	1.8897	0.7480			UC 307-20		
307-21	1 3/8												M14	1 /2	307-21	P 307	2.8
307		35	56	210	160	56	25	17	20	106	48	19			307		
307-23	1 7/16														307-23		
UCP 308-24	1 1/2		2 23/64	8 21/32	6 11/16	3 3/8	1 1/16	21/32	55/64	4 9/16	2.0472	0.7480	M14	1 /2	UP 308-24	P 308	3.6
308		40	60	220	170	60	27	17	22	116	52	19			308		
UCP 309-28	1 3/4		2 41/64	9 21/32	7 15/32	2 5/8	1 3/16	25/32	15/16	5 5/64	2.2441	0.8661	M16	5/8	UC 309-28	P 309	4.7
309		45	67	245	190	67	30	20	24	129	57	22			309		
UCP 310-31	1 15/16		2 61/64	10 13/16	8 11/32	2 15/32	1 3/8	25/32	1 1/16	5 5/8	2.4015	0.8661	M16	5/8	UC 310-31	P 310	6.4
310		50	75	275	212	75	35	20	27	143	61	22			310		
UCP 311-32	2		3 5/32	12 7/32	9 9/32	3 5/32	1 1/2	25/32	1 3/16	6 1/16	2.5984	0.9842	M16	5/8	UC 311-32	P 311	7.8
311		55	80	310	236	80	38	20	30	154	66	25			311		
UCP 312		60	3 11/32	13	9 27/32	3 11/32	1 1/2	1	1 1/4	1 1/2	2.7953	1.0236	M20	3/4	UC 312	P 312	9.4
312-36	2 1/4		85	330	250	85	38	25	32	165	71	26			312-36		
UCP 313-40	2 1/2		3 35/64	13 3/8	10 1/4	3 17/32	1 1/2	1	1 3/8	6 15/16	2.9528	1.1811	M20	3/4	UC 313-40	P 313	10.3
313		65	90	340	260	90	38	25	35	176	75	30			313		
UCP 314-44	2 3/4		3 47/64	14 3/16	11 1/32	3 17/32	1 9/16	1 1/16	1 3/8	7 23/64	3.0709	1.2992	M22	7/8	UC 314-44	P 314	11.9
314		70	95	360	280	90	40	27	35	187	78	33			314		
UCP 315		75	3 15/16	14 31/32	11 13/32	3 15/19	1 9/16	1 1/16	1 3/8	7 25/32	3.2283	1.2598			UC 315		
315-47	2 15/16		100	380	290	100	40	27	35	198	82	32	M22	7/8	315-47	P 315	14.5
315-48	3														315-48		
UCP 316		80	4 11/64	15 3/4	11 13/16	4 11/32	1 9/16	1 1/16	1 9/16	8 17/64	3.3858	1.3386	M22	7/8	UC 316	P 316	17.1
316-50	3 1/8		106	400	300	110	40	27	40	210	86	34			316-50		
UCP 317		85	4 13/32	16 17/32	12 19/32	4 11/32	1 25/32	1 5/16	1 9/16	8 21/32	3.7795	1.5748	M27	1	UC 317	P 317	19.2
317-52	3 1/4		112	420	320	110	45	33	40	220	96	40			317-52		
UCP 318-56	3 1/2		4 41/64	16 15/16	13	4 11/32	1 25/32	1 5/16	1 49/64	9 1/4	3.7795	1.5748	M27	1	UC 318-56	P 318	21.1
318		90	118	430	330	110	45	33	45	235	96	40			318		
UCP 319			4 59/64	18 1/2	14 3/16	4 23/32	1 31/32	1 13/32	1 49/64	9 27/32	4.0551	1.6142	M30	1 1/8	UC 319	P 319	28.2
		95	125	470	360	120	50	36	45	250	103	41					
UCP 320		100	5 33/64	19 9/32	14 31/32	4 23/32	1 31/32	1 13/32	1 31/32	10 53/64	4.2519	1.6535	M30	1 1/8	UC 320	P 320	34.8
320-64	4		140	490	380	120	50	36	40	275	108	42			320-64		
UCP 322		110	5 29/32	20 15/32	15 3/4	5 1/2	2 5/32	1 9/16	1 31/32	11 21/32	4.6063	1.8110	M33	1 1/4	UC 322	P 322	43.2
			150	520	400	140	55	40	50	296	117	46					
UCP 324		120	6 19/64	22 7/16	17 23/32	5 1/2	2 5/32	1 9/16	1 31/32	12 7/16	4.9606	2.0079	M33	1 1/4	UC 324	P 324	54.0
			160	570	450	140	55	40	50	316	126	51					
UCP 326		130	7 3/32	23 5/8	18 29/32	5 1/2	2 5/32	1 9/16	1 31/32	13 31/32	5.3150	2.1260	M33	1 1/4	UC 326	P 326	72.1
			180	600	480	140	55	40	50	355	135	54					
UCP 328		140	7 7/8	24 13/32	19 11/16	5 1/2	2 5/32	1 9/16	2 3/8	15 15/32	5.7086	2.3228	M33	1 1/4	UC 328	P 328	91.2
			200	620	500	140	55	40	60	393	145	59					

CUSCINETTO CON ALLOGGIAMENTO
INSERT BEARING WITH HOUSING

UCF 200 (normal–duty) versione standard

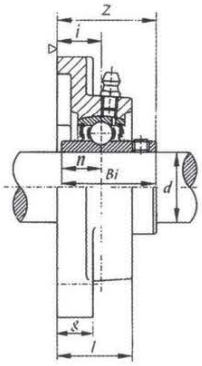

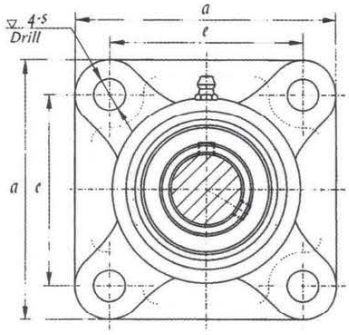

Bearing Unit No.	Shaft Dia. d (in.)	Shaft Dia. d (mm)	Dimensions (in.)or(mm) a	e	i	g	l	s	Z	Bi	n	Bolt Used (mm)	Bolt Used (in.)	Bearing No.	Housing No.	Weight (kg)
UCF 201		12	3 3/8	2 33/64	19/32	15/32	1	15/32	1 5/16	1.2205	0.5000	M10	3/8	UC 201	F 201	0.63
201-8	1 / 2		86	64	15	12	25.5	12	33.3	31.0	12.7			201-8		
UCF 202		15	3 3/8	2 33/64	19/32	15/32	1	15/32	1 5/16	1.2205	0.5000	M10	3/8	UC 202	F 202	0.63
202-10	5/8		86	64	15	12	25.5	12	33.3	31.0	12.7			202-10		
UCF 203		17	3 3/8	2 33/64	19/32	15/32	1	15/32	1 5/16	1.2205	0.5000	M10	3/8	UC 203	F 203	0.63
203-11	11/16		86	64	15	12	25.5	12	33.3	31.0	12.7			203-11		
UCF 204-12	3/4		3 3/8	2 33/64	19/32	15/32	1	15/32	1 5/16	1.2205	0.5000	M10	3/8	UC 204-12	F 204	0.63
204		20	86	64	15	12	25.5	12	33.3	31.0	12.7			204		
UCF 205-14	7/8													UC 205-14		
205-15	15/16		3 3/4	2 3/4	5/8	9/16	1 1/16	15/32	1 13/22	1.3425	0.5630	M10	3/8	205-15	F 205	0.82
205		25	95	70	16	14	27	12	35.8	34	14.3			205		
205-16	1													205-16		
UCF 206-18	1 1/8													UC 206-18		
206		30	4 1/4	3 17/64	45/64	9/16	1 7/32	15/32	1 19/32	1.5000	0.6260	M10	3/8	206	F 206	1.1
206-19	1 3/16		108	83	18	14	31	12	40.2	38.1	15.9			206-19		
206-20	1 1/4													206-20		
UCF 207-20	1 1/4													UC 207-20		
207-21	1 5/16		4 19/32	3 5/8	3/4	5/8	1 11/32	35/64	1 3/4	1.6890	0.6890			207-21		
207-22	1 3/8		117	92	19	16	34	14	44.4	42.9	17.5	M12	7/16	207-22	F 207	1.5
207		35												207		
207-23	1 7/16													207-23		
UCF 208-24	1 1/2		5 1/8	4 1/64	13/16	5/8	1 27/64	5/8	2 1/32	1.9370	0.7480			UC 208-24		
208-25	1 9/16		130	102	21	16	36	16	51.2	49.2	1.9	M14	1 /2	208-25	F 208	1.9
208		40												208		
UCF 209-26	1 5/8													UC 209-26		
209-27	1 11/16		5 13/32	4 9/64	55/64	23/32	1 1/2	5/8	2 1/16	1.9370	0.7480	M14	1 /2	209-27	F 209	2.3
209-28	1 3/4		137	105	22	18	38	16	52.2	49.2	19			209-28		
209		45												209		
UCF 210-30	1 7/8													UC 210-30		
210-31	1 15/16		5 5/8	4 3/8	55/64	23/32	1 9/16	5/8	2 5/32	2.0315	0.7480	M14	1 /2	210-31	F 210	2.5
210			143	111	22	18	40	16	54.6	51.6	19			210		
210-32	2	50												210-32		
UCF 211-32	2													UC 211-32		
211-34	2 1/8		6 3/8	5 1/8	1	25/32	1 11/16	3/4	2 5/16	2.1890	0.8740	M16	5/8	211-34	F 211	3.4
211		55	162	130	25	20	43	19	58.4	55.6	22.2			211		
211-35	2 3/16													211-35		
UCF 212-36	2 1/4													UC 212-36		
212		60	6 7/8	5 5/8	1 9/64	25/32	1 7/8	3/4	2 23/32	2.5630	1.0000	M16	5/8	212	F 212	4.4
212-38	2 1/8		175	143	29	20	48	19	68.7	65.1	25.4			212-38		
212-39	2 7/16													212-39		
UCF 213-40	2 1/2		7 3/8	5 55/64	1 3/16	25/32	1 31/32	3/4	2 3/4	2.5630	1.0000	M16	5/8	UC 213-40	F 213	5.3
213		65	187	149	30	20	50	19	69.7	65.1	25.4			213		
UCF 214-44	2 3/4		7 19/32	5 63/64	1 7/32	15/16	2 1/8	3/4	2 31/32	2.9370	1.1890	M16	5/8	UC 214-44	F 214	6.0
214		70	193	152	31	24	54	19	75.4	74.6	30.2			214		
UCF 215		75	7 7/8	6 17/64	1 11/32	15/16	2 7/32	3/4	3 3/32	3.0630	1.3110			UC 215		
215-47	2 15/16		200	159	34	24	56	19	78.5	77.8	33.3	M16	5/8	215-47	F 215	6.6
215-48	3													215-48		
UCF 216		80	8 3/16	6 1/2	1 11/32	15/16	2 7/32	3/7	3 32	3.2520	1.3110	M20	3/4	UC 216	F 216	7.5
216-50	3 1/8		208	165	34	24	56	19	78	82.6	33.3			216-50		
UCF 217-52	3 1/4		8 21/32	6 57/64	1 27/64	1 1/32	2 15/32	29/32	3 7/16	3.3740	1.3425	M20	3/4	UC 217-52	F 217	9.1
217		85	220	175	36	26	63	23	87.6	85.7	34.1			217		
UCF 218-56	3 1/2		9 1/4	7 23/64	1 37/64	1 1/32	2 11/16	29/32	3 25/32	3.7793	1.5630	M20	3/4	UC 218-56	F 218	11.3
218		90	235	187	40	26	68	23	96.3	96.0	39.7			218		

Supporti auto-allineanti

UCF 300 (heavy–duty) versione pesante

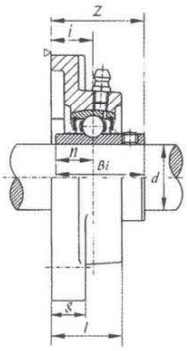

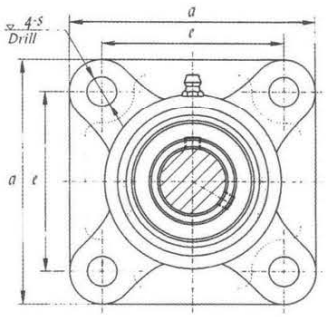

Bearing Unit No.	Shaft Dia. d (in.)	Shaft Dia. d (mm)	Dimensions (in.)or(mm) a	e	l	g	l	s	Z	Bi	n	Bolt Used (mm)	Bolt Used (in.)	Bearing No.	Housing No.	Weight (kg)
UCF 305		25	4 11/32	3 5/32	5/8	1	1 5/32	5/8	1 17/32	1.4961	0.5906	M14	1 /2	UC 305	F 305	1.20
305-16	1		110	80	16	13	29	16	39	38	15			305-16		
UCF 306-18	1 1/8		4 29/32	3 47/64	45/64	19/32	1 1/4	5/8	1 23/32	1.6929	0.6693			UC 306-18		
306		30	125	95	18	15	32	16	44	43	17	M14	1 /2	306	F 306	1.8
306-19	1 3/16													306-19		
UCF 307-20	1 1/4													UC 307-20		
307-21	1 3/8		5 5/16	3 15/16	25/32	5/8	1 13/32	3/4	1 15/16	1.8897	0.7480	M16	5/8	307-21	F 307	2.2
307		35	135	100	20	6	36	19	49	48	19			307		
307-23	1 7/16													307-23		
UCF 308-24	1 1/2		5 29/32	4 13/32	29/32	21/32	1 9/16	3/4	2 7/32	2.0472	0.7480	M16	5/8	UC 308-24	F 308	3.0
308		40	150	112	23	17	40	19	56	52	19			308		
UCF 309-28	1 3/4		6 5/16	4 59/64	63/64	23/32	1 23/32	3/4	2 3/8	2.2441	0.8661	M16	5/8	UC 309-28	F 309	3.8
309		45	160	125	25	18	44	19	60	57	22			309		
UCF 310-31	1 15/16		6 7/8	5 13/64	1 7/64	3/4	1 7/8	29/32	2 5/8	2.7015	0.8661			UC 310-31		
310		50	175	132	28	19	48	23	67	61	22	M20	3/4	310	F 310	4.9
310-32	2													310-32		
UCF 311-32	2		7 9/32	5 13/64	1 3/16	25/32	2 1/16	29/32	2 25/32	2.5984	0.9842	M20	3/4	UC 311-32	F 311	5.6
311		55	185	140	30	20	52	23	71	66	25			311		
UCF 312		60	7 11/16	5 9/32	1 19/64	7/8	2 7/32	29/32	3 1/16	2.7953	1.0236	M20	3/4	UC 312	F 312	6.8
312-36	2 1/4		195	150	33	22	56	23	78	71	26			312-36		
UCF 313-40	2 1/2		8 3/16	6 17/32	1 19/64	7/8	2 9/32	29/32	3 1/16	2.9528	1.1811	M20	3/4	UC 313-40	F 313	7.8
313		65	208	166	33	22	58	23	78	75	30			313		
UCF 314-44	2 3/4		8 29/32	7 1/16	1 27/64	1	2 13/32	63/64	3 3/16	3.0709	1.2990	M22	7/8	UC 314-44	F 314	9.8
314		70	226	178	36	25	61	25	81	78	33			314		
UCF 315		75	9 9/32	7 1/4	1 17/32	1	2 19/32	63/64	3 1/2	3.2283	1.2598			UC 315		
315-47	2 15/16		236	184	39	25	66	25	89	82	32	M22	7/8	315-47	F 315	11.6
315-48	3													315-48		
UCF 316		80	9 27/32	7 23/32	1 17/32	1 1/16	2 11/16	1 7/32	19/32	3.3858	1.3386	M27	1	UC 316	F 316	13.2
316-50	3 1/8		250	196	39	27	68	31	91	86	34			316-50		
UCF 317		85	10 1/4	8 1/32	1 47/64	1 1/16	2 29/32	1 7/32	3 15/16	3.7795	1.5748	M27	1	UC 317	F 317	15.2
			260	204	44	27	74	31	100	96	40					
UCF 318-56	3 1/2		11 1/32	8 1/2	1 47/64	1 3/16	3	1 3/8	3 15/16	3.7795	1.5748	M30	1 1/8	UC 318-56	F 318	18.8
318		90	280	216	44	30	76	35	100	96	40			318		
UCF 319			11 13/32	8 31/32	2 21/64	1 3/16	3 11/16	1 3/8	4 3/4	4.0551	1.6142	M30	1 1/8	UC 319	F 319	21.1
		95	290	228	59	30	94	35	121	103	41					
UCF 320		100	12 7/32	9 17/32	2 21/64	1 1/4	3 11/16	1 1/2	4 29/32	4.2519	1.6535	M33	1 1/4	UC 320	F 320	25.3
320-64	4		310	242	59	32	94	38	125	108	42			320-64		
UCF 322		110	13 3/8	1015/32	223/64	13/8	325/32	139/64	55/32	4.6063	1.8110	M36	13/8	UC 322	F 322	35.0
			340	266	60	35	96	41	131	117	46					
UCF 324		120	14 9/16	1127/64	29/16	19/16	411/32	139/64	51/2	4.9606	2.0079	M36	13/8	UC 324	F 324	47.2
			370	290	65	40	110	41	140	126	51					
UCF 326		130	16 5/32	1219/32	29/16	125/32	417/32	139/64	53/4	5.3150	2.1260	M36	13/8	UC 326	F 326	64.1
			410	320	65	45	115	41	146	135	54					
UCF 328		140	17 23/32	1325/32	261/64	25/32	429/32	139/64	611/32	5.7086	2.3228	M36	13/8	UC 328	F 328	90.2
			450	350	75	55	125	41	161	145	59					

CUSCINETTO CON ALLOGGIAMENTO
INSERT BEARING WITH HOUSING

UCFC 200 (normal–duty) versione standard

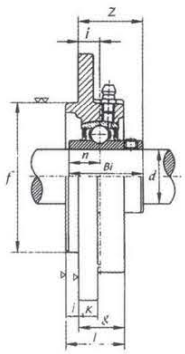

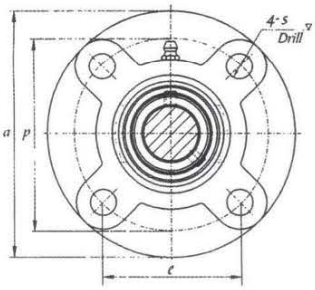

Bearing Unit No.	Shaft Dia. d (in.)	Shaft Dia. d mm	Dimensions (in.)or(mm) a	p	e	i	l	s	j	k	g	f	z	Bi	n	Bolt Used (mm)	Bolt Used (in.)	Bearing No.	Housing No.	Weight (kg)
UCFC 201		12	3 15/16	3 5/64	2 11/64	25/64	1	15/32	13/64	9/32	13/16	2.4409	1 1/8	1.2205	0.5000	M10	3/8	UC 201	FC 201	0.78
201-8	1 / 2		100	78	55.116	10	25.5	12	5	7	20.5	62	28.3	31.0	12.7			201-8		
UCFC 202		15	3 15/16	3 5/64	2 11/64	25/64	1	15/32	13/64	9/32	13/16	2.4409	1 1/8	1.2205	0.5000	M10	3/8	UC 202	FC 202	0.78
202-10	5/8		100	78	55.1	10	25.5	12	5	7	20.5	62	28.3	31.0	12.7			202-10		
UCFC 203		17	3 15/16	3 5/64	2 11/64	25/64	1	15/32	15/64	9/32	13/16	2.4409	1 1/8	1.2205	0.5000	M10	3/8	UC 203	FC 203	0.78
203-11	11/16		100	78	55.1	10	25.5	12	6	7	20.5	62	28.3	31.0	12.7			203-11		
UCFC 204-12	3/4	20	3 15/16	3 5/64	2 11/64	25/64	1	15/32	15/64	9/32	13/16	2.4409	1 1/8	1.2205	0.5000	M10	3/8	UC 204-12	FC 204	0.78
204			100	78	55.1	10	25.5	12	6	7	20.5	62	28.3	31.0	12.7			204		
UCFC 205-14	7/8																	UC 205-14		
205-15	15/16		4 17/32	3 35/64	2 1/2	25/64	1 1/16	15/32	15/64	9/32	53/64	2.7559	1 5/32	1.3425	0.5630	M10	3/8	205-15	FC 205	0.95
205		25	155	90	63.6	10	27	12	6	7	21	70	29.7	34.1	14.3			205		
205-16	1																	205-16		
UCFC 206-18	1 1/8																	UC 206-18		
206		30	4 29/32	3 15/16	2 25/32	25/64	1 7/32	15/32	5/16	5/16	29/32	3.1486	7 9/32	1.5000	0.6260	M10	3/8	206	FC 206	1.4
206-19	1 3/16		125	100	70.7	10	31	12	8	8	23	80	32.2	38.1	15.9			206-19		
206-20	1 1/4																	206-20		
UCFC 207-20	1 1/4																	UC 207-20		
207-21	1 5/16		5 5/16	4 21/64	3 1/16	7/16	1 11/32	35/64	5/16	11/32	1 1/32	3.8433	1 7/16	1.6890	0.6890			207-21		
207-22	1 3/8		135	110	77.8	11	34	14	8	9	26	90	36.4	42.9	17.5	M12	7/16	207-22	FC 207	1.7
207		35																207		
207-23	1 7/16																	207-23		
UCFC 208-24	1 1/2		5 23/32	4 23/32	3 11/32	7/16	1 27/64	35/64	25/64	11/32	1 1/32	3.9370	1 5/8	1.9370	0.7480			UC 208-24		
208-25	1 9/16		145	120	84.8	11	36	14	10	9	26	100	41.2	49.2	19	M12	7/16	208-25	FC 208	2.0
208		40																208		
UCFC 209-26	1 5/8																	UC 209-26		
209-27	1 11/16		6 5/16	5 13/64	3 43/64	25/64	1 1/2	5/8	15/32	9/16	1 1/32	4.1339	1 19/32	1.937	0.748	M14	1 /2	209-27	FC 209	2.8
209-28	1 3/4		160	132	93.3	10	38	16	12	14	26	105	40.2	49.2	19			209-28		
209		45																209		
UCFC 210-30	1 7/8		6 1/2	5 7/16	3 27/32	25/64	1 9/16	5/8	15/32	9/16	1 7/64	4.3307	1 11/16	2.0315	0.748			UC 210-30		
210-31	1 15/16		165	138	97.6	10	40	16	12	14	28	110	42.6	51.6	19	M14	1 /2	210-31	FC 210	3.0
210		50																210		
UCFC 211-32	2																	UC 211-32		
211-34	2 1/8		7 9/32	5 29/32	4 44/64	33/64	1 11/16	3/4	15/32	19/32	1 7/32	4.9213	1 13/16	2.189	0.874	M16	5/8	211-34	FC 211	4.0
211		55	185	150	106.1	13	43	19	12	15	31	125	46.4	55.6	22.2			211		
211-35	2 3/16																	211-35		
UCFC 212-36	2 1/4																	UC 212-36		
212		60	7 11/16	6 19/64	4 29/64	43/64	1 7/8	3/4	15/32	19/32	1 27/64	5.3150	2 7/32	2.563	1.0000	M16	5/8	212	FC 212	4.7
212-38	2 1/8		195	160	113.1	17	48	19	12	15	36	135	56.7	65.1	25.4			212-38		
212-39	2 7/16																	212-39		
UCFC 213-40	2 1/2		8 1/16	6 11/16	4 47/64	5/8	1 31/32	3/4	35/64	19/32	1 27/64	5.7087	2 3/16	2.5630	1.0000	M16	5/8	UC 213-40	FC 213	5.4
213		65	205	170	120	16	50	19	14	15	36	145	55.7	65.1	25.4			213		
UCFC 214-44	2 3/4		8 15/32	6 31/32	4 59/64	43/64	2 1/8	3/4	35/64	23/32	1 37/64	5.9055	2 13/32	2.9370	1.1890	M16	5/8	UC 214-44	FC 214	6.8
214		70	215	177	125.1	17	54	19	14	18	40	150	61.4	74.6	30.2			214		
UCFC 215		75	8 21/32	7 1/4	5 1/8	45/64	2 7/32	3/4	5/8	23/32	1 37/64	6.2992	2 15/32	3.0630	1.3110			UC 215		
215-48	3		220	184	130.1	18	56	19	16	18	40	160	62.5	77.8	33.3	M16	5/8	215-47	FC 215	7.3
UCFC 216			9 7/16	7 7/8	5 9/16	45/64	2 9/32	29/32	5/8	23/32	1 21/32	6.6929	2 21/32	3.2520	1.3110	M20	3/4	UC 216	FC 216	8.9
		80	240	200	141.4	18	56	23	16	18	18	170	67.3	82.6	33.3					
UCFC 217-52	3 1/4		9 27/32	8 3/16	5 51/64	45/64	2 15/32	29/32	45/64	25/32	1 49/64	7.0866	2 3/4	3.3740	1.3425	M20	3/4	UC 217-52	FC 217	10.4
217		85	250	208	147.1	18	63	23	18	20	45	180	69.6	85.7	34.1			217		
UCFC 218-56	3 1/2		10 7/16	8 21/32	6 1/8	55/64	2 11/16	29/32	45/64	25/32	1 31/32	7.4803	3 3/32	3.7795	1.5630	M20	3/4	UC 218-56	FC 218	13.0
218		90	265	220	155.5	22	68	23	18	20	50	190	78.3	96.0	39.7			218		

Supporti auto-allineanti

UCFL 200 (normal–duty) versione standard

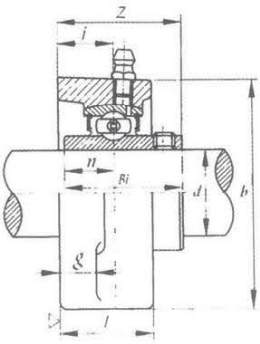

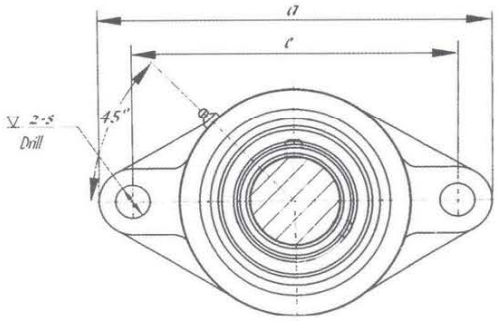

Bearing Unit No.	Shaft Dia. d (in.)	Shaft Dia. d (mm)	Dimensions (in.)or(mm) a	e	i	g	l	s	b	z	Bi	n	Bolt Used (mm)	Bolt Used (in.)	Bearing No.	Housing No.	Weight (kg)
UCFL 201		12	4 7/16	3 35/64	19/32	7/16	1	15/32	2 3/8	1 5/16	1.2205	0.5000	M10	3/8	UC 201	FL 201	0.49
201-8	1 / 2		113	90	15	11	25.5	12	60	33.3	31.0	12.7			201-8		
UCFL 202		15	4 7/16	3 35/64	19/32	7/16	1	15/32	2 3/8	1 5/16	1.2205	0.5000	M10	3/8	UC 202	FL 202	0.49
202-10	5/8		113	90	15	11	25.5	12	60	33.3	31.0	12.7			202-10		
UCFL 203		17	4 7/16	3 35/64	19/32	7/16	1	15/32	2 3/8	1 5/16	1.2205	0.5000	M10	3/8	UC 203	FL 203	0.49
203-11	11/16		113	90	15	11	25.5	12	60	33.3	31.0	12.7			203-11		
UCFL 204-12	3/4		4 7/16	3 35/64	19/32	7/16	1	15/32	2 3/8	1 5/16	1.2205	0.5000	M10	3/8	UC 204-12	FL 204	0.49
204		20	113	90	15	11	25.5	12	60	33.3	31.0	12.7			204		
UCFL 205-14	7/8														UC 205-14		
205-15	15/16		5 1/8	3 57/64	5/8	1 / 2	1 1/16	5/8	2 11/16	1 13/32	1.3386	0.5630	M14	1 /2	205-15	FL 205	0.63
205		25	130	99	16	13	27	16	68	35.7	34	14.3			205		
205-16	1														205-16		
UCFL 206-18	1 1/8														UC 206-18		
206		30	5 13/16	4 39/64	45/64	1 / 2	1 7/32	5/8	3 5/32	1 19/32	1.5000	0.6260	M14	1 /2	206	FL 206	0.94
206-19	1 3/16		148	117	18	13	31	16	80	40.2	38.1	15.9			206-19		
206-20	1 1/4														206-20		
UCFL 207-20	1 1/4														UC 207-20		
207-21	1 5/16		6 11/32	5 1/8	3/4	9/16	1 11/32	5/8	3 17/32	1 3/4	1.6890	0.6890	M14	1 /2	207-21		
207-22	1 3/8		161	130	19	14	34	16	90	44.4	42.9	17.5			207-22	FL 207	1.2
207		35													207		
207-23	1 7/16														207-23		
UCFL 208-24	1 1/2		6 7/8	5 43/64	53/64	9/16	1 13/32	5/8	3 5/16	2 1/32	1.9370	0.7480			UC 208-24		
208-25	1 9/16		175	144	21	14	36	16	112	51.2	49.2	19	M14	1 /2	208-25	FL 208	1.6
208		40													208		
UCFL 209-26	1 5/8														UC 209-26		
209-27	1 11/16		7 13/32	5 53/64	55/64	19/32	1 1/2	3/4	4 1/4	2 1/16	1.9370	0.7480	M16	5/8	209-27	FL 209	1.9
209-28	1 3/4		188	148	22	15	38	19	108	52.2	49.2	19			209-28		
209		45													209		
UCFL 210-30	1 7/8														UC 210-30		
210-31	1 15/16		7 3/4	6 3/16	55/64	19/32	1 9/16	3/4	4 17/32	2 5/32	2.0315	0.748	M16	5/8	210-31	FL 210	2.2
210			197	157	22	15	40	19	115	54.6	51.6	19			210		
210-32	2	50													210-32		
UCFL 211-32	2														UC 211-32		
211-34	2 1/8		8 13/16	7 1/4	63/64	23/32	1 11/16	3/4	5 1/8	2 5/16	2.189	0.874	M16	5/8	211-34	FL 211	3.2
211		55	224	184	25	18	43	19	130	58.4	55.6	22.2			211		
211-35	2 3/16														211-35		
UCFL 212-36	2 1/4														UC 212-36		
212		60	9 27/32	7 61/64	1 9/64	23/32	1 7/8	29/32	5 1/2	2 23/32	2.563	1	M20	3/4	212	FL 212	4.1
212-38	2 1/8		250	202	29	18	48	23	140	68.7	65.1	25.4			212-38		
212-39	2 7/16														212-39		
UCFL 213-40	2 1/2		10 5/32	8 17/64	1 3/16	25/32	1 31/32	29/32	6 3/32	2 3/4	2.5630	1.0000	M20	3/4	UC 213-40	FL 213	5.1
213		65	258	210	30	20	50	23	155	69.7	65.1	25.4			213		
UCFL 214-44	2 3/4		10 7/16	8 1/2	1 7/32	25/32	2 1/8	29/32	6 5/16	2 31/32	2.9370	1.1890	M20	3/4	UC 214-44	FL 214	5.9
214		70	265	216	31	20	54	23	160	75.4	74.6	30.2			214		
UCFL 215		75	10 13/16	8 55/64	1 11/32	25/32	2 7/32	29/32	6 1/2	3 3/32	3.0630	1.3110	M20	3/4	UC 215	FL 215	6.4
215-48	3		275	225	34	20	56	23	165	78.5	77.8	33.3			215-48		
UCFL 216		80	11 13/32	9 11/64	1 11/32	25/32	2 9/32	63/64	7 3/32	3 9/32	3.2520	1.3110	M20	7/8	UC 216	FL 216	7.9
216-50	3 1/8		290	233	34	20	58	25	180	83.3	82.6	33.3			216-50		
UCFL 217-52	3 1/4		12	9 49/64	1 27/64	7/8	2 15/32	63/64	7 15/32	3 7/16	3.3740	1.3425	M20	7/8	UC 217-52	FL 217	9.6
217		85	305	248	36	22	63	25	190	87.6	85.7	34.1			217		
UCFL 218-56	3 1/2		12 19/32	10 7/16	1 37/64	29/32	2 11/16	63/64	8 11/16	3 25/32	3.7795	1.5630	M20	7/8	UC 218-56	FL 218	12.1
218		90	320	265	40	23	68	25	205	96.3	96.0	39.7			218		

CUSCINETTO CON ALLOGGIAMENTO
INSERT BEARING WITH HOUSING

UCFL 300 (heavy-duty) versione pesante

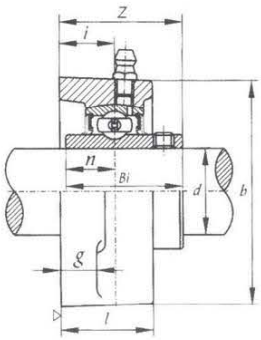

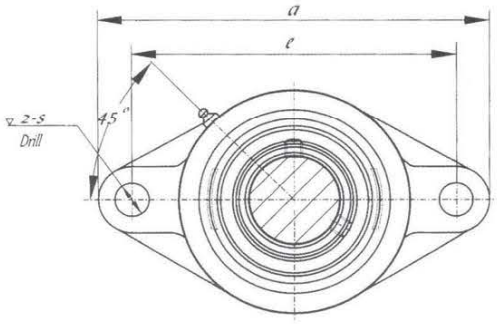

Bearing Unit No.	Shaft Dia. d (in.)	Shaft Dia. d (mm)	Dimensions (in.)or(mm) a	e	i	g	l	s	b	z	Bi	n	Bolt Used (mm)	Bolt Used (in.)	Bearing No.	Housing No.	Weight (kg)
UCFL 305		25	5 29/32	29/64	5/8	1 / 2	1 5/32	3/4	3 5/32	1 17/32	1.4961	0.5906	M16	5/8	UC 305	FL 305	1.1
305-16	1		150	113	16	13	29	19	80	39	38	15			305-16		
UCFL 306-18	1 1/8		7 3/32	5 9/32	45/64	19/32	1 1/4	29/32	3 17/32	1 23/32	1.6929	0.6693			UC 306-18		
306		30	180	134	18	15	32	23	90	44	43	17	M20	3/4	306	FL 306	1.5
306-20	1 1/4														306-20		
UCFL 307-20	1 1/4														UC 307-20		
307-22	1 3/8		7 9/32	5 35/64	25/32	5/8	1 13/32	29/32	3 15/16	1 15/16	1.8897	0.7480	M20	3/4	307-22	FL 307	1.8
307		35	185	141	20	16	36	23	100	49	48	19			307		
307-23	1 7/16														307-23		
UCFL 308-24	1 1/2		7 7/8	6 7/32	29/32	21/32	1 9/16	29/32	4 13/32	2 7/32	2.0472	0.7480	M20	3/4	UP 308-24	FL 308	2.4
308		40	200	158	23	17	40	23	112	56	52	19			308		
UCFL 309-28	1 3/4		9 1/16	6 31/32	63/64	23/32	1 23/32	63/64	4 29/32	2 3/8	2.2441	0.8661	M22	7/8	UC 309-28	FL 309	3.4
309		45	230	177	25	18	44	25	125	60	57	22			309		
UCFL 310-31	1 15/16		9 7/16	7 23/64	1 7/64	3/4	1 7/8	63/64	5 1/2	2 5/8	2.4015	0.8661			UC 310-31		
310		50	240	187	28	19	48	25	140	67	61	22	M22	7/8	310	FL 310	4.3
310-32	2														310-32		
UCFL 311-32	2		9 27/32	7 51/64	1 3/16	25/32	2 1/16	63/64	5 29/32	2 25/32	2.5984	0.9842	M22	7/8	UC 311-32	FL 311	5.2
311		55	250	198	30	20	52	25	150	71	66	25			311		
UCFL 312		60	10 5/8	8 11/32	1 19/64	7/8	2 7/32	1 7/32	6 5/16	3 5/16	2.7953	1.0236	M27	1	UC 312	FL 312	6.3
312-36	2 1/4		270	212	33	22	56	31	160	78	71	26			312-36		
UCFL 313-40	2 1/2		11 5/8	9 29/64	1 19/64	1	2 9/32	1 7/32	6 7/8	3 1/16	2.9528	1.1811	M27	1	UC 313-40	FL 313	7.9
313		65	295	240	33	25	58	31	175	78	75	30			313		
UCFL 314-44	2 3/4		12 13/32	9 27/32	1 27/64	1 3/32	2 13/32	1 3/8	7 9/32	3 3/16	3.0709	1.2992	M30	1 1/8	UC 314-44	FL 314	9.3
314		70	315	250	36	28	28	35	185	81	78	33			314		
UCFL 315		75	12 19/32	10 15/64	1 17/32	1 3/16	2 19/32	1 3/8	7 11/16	3 1/2	3.2283	1.2598	M30	1 1/8	UC 315	FL 315	10.6
315-48	3		320	260	39	30	66	35	195	89	82	32			315-48		
UCFL 316		80	13 31/32	11 7/32	1 1/2	1 1/4	2 11/16	1 1/2	8 9/32	3 17/32	3.3858	1.3386	M33	1 1/4	UC 316	FL 316	13.5
316-50	3 1/8		355	285	38	32	38	38	210	90	86	34			316-50		
UCFL 317		85	14 9/16	11 13/16	1 47/64	1 1/4	2 29/32	1 1/2	8 21/32	3 15/16	3.7795	1.5748	M33	1 1/4	UC 317	FL 317	15.2
317-52	3 1/4		370	300	44	32	74	38	220	100	96	40			317-52		
UCFL 318-56	3 1/2		15 5/32	12 13/32	1 47/64	1 13/32	3	1 1/2	9 1/4	3 15/16	3.7795	1.5748	M33	1 1/7	UC 318-56	FL 318	18.0
318		90	185	315	44	36	76	38	235	100	96	40			318		
UCFL 319			15 15/16	13	2 21/64	1 9/16	3 11/16	1 39/64	9 27/32	4 3/4	4.0551	1.6142	M36	1 3/8	UC 319	FL 319	22.7
		95	405	330	59	40	94	41	250	121	103	41					
UCFL 320		100	17 5/16	14 11/64	2 21/64	1 9/16	3 11/16	1 47/64	10 5/8	4 29/32	4.2519	1.6535	M39	1 1/2	UC 320	FL 320	27.2
320-64	4		440	360	59	40	94	44	270	125	108	42			320-64		
UCFL 322		110	18 1/2	15 23/64	2 23/64	1 21/32	3 25/32	1 47/64	11 13/16	5 5/32	4.6063	1.8110	M39	1 1/2	UC 322	FL 322	34.2
			470	390	60	42	96	44	300	131	117	46					
UCFL 324		120	20 15/32	16 59/64	2 9/16	1 7/8	4 11/32	1 27/32	13	5 1/2	4.9606	2.0079	M42	1 5/8	UC 324	FL 324	48.1
			520	430	65	48	110	47	330	140	126	51					
UCFL 326		130	21 21/32	18 7/64	2 9/16	1 31/32	4 17/32	1 27/32	14 3/16	5 3/4	5.3150	2.1260	M42	1 5/8	UC 326	FL 326	59.5
			550	460	65	50	115	47	360	146	135	54					
UCFL 328		140	23 5/8	19 11/16	2 61/64	2 3/8	4 29/32	2	15 3/4	6 11/32	5.7086	2.3228	M45	1 3/4	UC 328	FL 328	73.5
			600	500	75	60	125	51	400	161	145	59					

Supporti auto-allineanti

UCT 200 (narrow metric slot) fessura metrica stretta

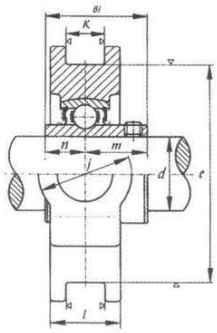

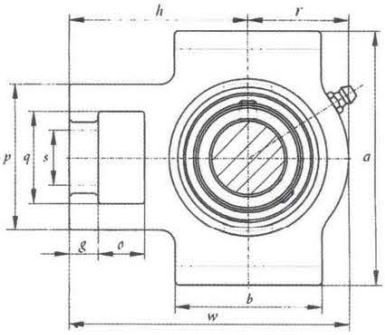

Bearing unit No.	Shaft Dia.	Dimensions (in.)or(mm)															Bearing No.	Housing No.	Weight (kg)
	(in.)	o	g	p	q	s	b	k	e	a	w	j	l	h	Bi	n			
UCT 201	12	16	10	51	32	19	51	12	76	89	94	32	21	61	31	12.7	UC 201	T 204	0.79
UCT 202	15	16	10	51	32	19	51	12	76	89	94	32	21	61	31	12.7	UC 202	T 204	0.79
UCT 203	17	16	10	51	32	19	51	12	76	89	94	32	21	61	31	12.7	UC 203	T 204	0.79
UCT 204	20	16	10	51	32	19	51	12	76	89	94	32	21	61	31	12.7	UC 204	T 204	0.79
UCT 205	25	16	10	51	32	19	51	12	76	89	97	32	24	62	34	14.3	UC 205	T 205	0.83
UCT 206	30	16	10	56	37	22	57	12	89	102	113	37	28	70	38.1	15.9	UC 206	T 206	1.3
UCT 207	35	16	13	64	37	22	64	12	89	102	129	37	30	78	42.9	17.5	UC 207	T 207	1.3
UCT 208	40	19	16	83	49	29	83	16	102	114	144	49	33	88	49.2	19	UC 208	T 208	2.4
UCT 209	45	19	16	83	49	29	83	16	102	117	144	49	35	87	49.2	19	UC 209	T 209	2.4
UCT 210	50	19	16	83	49	29	86	16	102	117	149	49	37	90	51.6	19	UC 210	T 210	2.5
UCT 211	55	25	19	102	64	35	95	22	130	146	171	64	38	106	55.6	22.2	UC 211	T 211	4.0
UCT 212	60	32	19	102	64	35	102	22	130	146	194	64	42	119	65.1	25.4	UC 212	T 212	5.0
UCT 213	65	32	21	111	70	41	121	26	151	167	224	70	44	137	65.1	25.4	UC 213	T 213	6.9
UCT 214	70	32	21	111	70	41	121	26	151	167	224	70	46	137	74.3	30.2	UC 214	T 214	7.0
UCT 215	75	32	21	111	70	41	121	26	151	167	232	70	48	140	77.8	33.3	UC 215	T 215	7.4
UCT 216	80	32	21	111	70	41	121	26	165	184	235	70	51	140	82.3	33.3	UC 216	T 216	8.3
UCT 217	85	38	29	124	73	48	157	30	173	198	260	73	54	162	85.7	34.1	UC 217	T 217	11.1

CUSCINETTO CON ALLOGGIAMENTO
INSERT BEARING WITH HOUSING

UCT 300 versione pesante

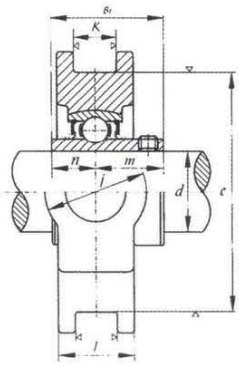

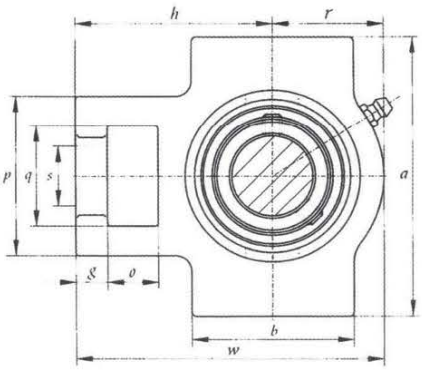

Bearing Unit No.	Shaft Dia. d (in.)	Shaft Dia. d mm	Dimensions (in.)or(mm) o	g	p	q	i s	b	k	e	a	w	j	l	r	h	Bi	n	m	Bearing No.	Housing No.	Weight (kg)
UCT 305		25	5/8	15/32	2 7/16	1 13/32	1 13/32	2 9/16	15/32	3 5/32	3 1/2	4 13/16	1 13/32	1 1/32	1 13/16	3	1.4961	0.5906	0.9055	UC 305		
305-16	1		16	12	62	36	26	65	12	80	89	122	36	26	46	76	38	15	23	305-16	T 305	1.4
305-18	1 1/8																			305-18		
UCT 306		30	23/32	9/16	2 3/4	1 5/8	1 7/64	2 29/32	5/8	3 35/64	15/16	5 13/32	1 5/8	1 3/32	2 1/16	3 11/32	1.6929	0.6693	1.0236	UC 306		
306-19	1 3/16		18	14	70	41	28	74	16	90	100	137	41	28	52	85	43	17	26	306-19	T 306	1.8
UCT 307-20	1 1/4																			UC 307-20		
307-22	1 3/8		25/32	19/32	2 15/16	1 25/32	1 3/16	3 5/32	5/8	3 15/16	4 3/8	5 29/32	1 25/32	1 1/4	2 7/32	3 11/16	1.8897	0.7480	1.1417	307-22	T 307	2.3
307		35	20	15	75	45	30	80	16	100	111	150	45	32	56	94	48	19	29	307		
307-23	1 7/16																			307-23		
UCT 308-24	1 1/2		7/8	21/32	3 9/32	1 31/32	1 17/64	3 1/2	45/64	4 13/32	4 7/8	6 3/8	1 31/32	1 11/32	2 7/16	3 15/16	2.0472	0.7480	1.2992	UC 308-24	T 308	3.0
308		40	22	17	83	50	32	89	18	112	124	162	50	34	62	100	52	19	33	308		
UCT 309-28	1 3/4		15/16	12/32	3 17/32	2 5/32	1 11/64	3 13/16	45/64	4 59/64	5 7/16	7	2 5/32	1 1/2	2 11/16	4 11/32	2.2441	0.8661	1.3780	UC 309-28	T 309	4.1
309		45	24	18	90	55	34	97	18	125	138	138	55	38	68	110	57	22	35	309		
UCT 310-30	1 7/8																			UC 310-30		
310-31	1 15/16		1 1/16	25/32	3 27/32	2 13/32	1 29/64	4 3/16	25/32	5 33/94	5 15/16	7 17/32	2 13/32	1 9/16	2 29/32	4 19/32	2.4015	0.8661	1.5354	310-31	T 310	4.9
310		50	27	20	98	61	37	106	20	140	151	191	61	40	74	117	61	22	39	310		
310-32																				310-32		
UCT 311-32	2		1 5/32	13/16	4 1/8	2 19/32	1 17/32	4 17/32	55/64	2 29/32	6 13/32	8 5/32	2 19/32	1 23/32	3 5/32	5	2.5984	0.9842	1.6142	UC 311-32	T 311	6.1
311		55	29	21	105	66	39	115	22	150	163	207	66	44	80	127	66	25	41	311		
UCT 312		60	1 7/32	29/32	4 7/16	2 25/32	1 39/64	4 27/32	55/64	6 19/64	7	8 21/32	2 25/32	1 13/16	3 11/32	5 5/16	2.7953	1.0236	1.7717	UC 312	T 312	7.6
312-36	2 1/4		31	23	113	71	41	123	22	160	178	220	71	46	85	135	71	26	45	312-36		
UCT 313-40	2 1/2		1 1/4	1	4 9/16	3/4	1 11/16	5 9/32	1 1/32	6 11/16	7 15/32	9 3/8	3 5/32	1 31/32	3 5/8	5 63/4	2.9528	1.1811	1.7717	UC 313-40	T 313	9.3
313		65	32	25	116	70	43	134	26	170	190	238	80	50	92	146	75	30	45	313		
UCT 314-44	2 3/4		1 13/32	1	5 1/8	3 11/32	1 13/16	5 1/2	1 1/32	7 3/32	7 15/16	9 29/32	3 17/32	2 1/16	3 13/16	6 3/32	3.0709	1.2992	1.7717	UC 314-44	T 314	11.1
314		70	36	25	130	85	46	140	26	180	202	252	90	52	97	155	78	33	45	314		
UCT 315		75	1 13/32	1	5 3/16	3 11/32	1 13/16	5 19/32	1 1/32	7 9/16	8 1/2	10 5/16	3 17/32	2 5/32	4 1/32	6 5/16	3.2283	1.2598	1.9685	UC 315	T 315	13
315-48	3		36	25	132	85	46	150	26	192	216	262	90	55	102	160	82	32	50	315-48		
UCT 316		80	1 21/32	1 3/32	5 29/32	3 27/32	2 3/32	6 5/16	1 3/16	8 1/32	9 1/16	11 3/32	4 1/32	2 3/8	4 1/4	6 27/32	3.3858	1.3386	2.0472	UC 316	T 316	16.2
316-50	3 1/8		42	28	150	98	53	160	30	204	230	282	102	60	108	174	86	34	52	316-50		
UCT 317		85	1 21/32	1 3/16	5 31/32	3 27/32	2 3/32	6 11/16	1 17/64	8 27/64	9 7/16	11 23/32	4 1/32	2 17/32	4 17/32	7 7/32	3.7795	1.5748	2.2047	UC 317	T 317	19
317-52	3 1/4		42	30	152	98	98	170	32	210	240	298	102	64	115	183	96	40	56	317-52		
UCT 318-56	3 1/2		1 13/16	1 3/16	6 5/16	4 3/6	2 1/4	6 7/8	1 17/64	8 31/32	10 1/32	12 9/32	4 11/32	2 19/32	4 23/32	7 9/16	3.7795	1.5748	2.2047	UC 318-56	T 318	21.6
318		90	46	30	160	106	57	175	32	228	255	312	110	66	120	192	96	40	56	318		
UCT 319			1 13/16	1 7/32	6 1/2	4 3/6	2 1/4	7 3/32	1 3/8	9 29/64	10 5/8	12 1/16	4 11/32	2 27/32	4 29/32	7 3/4	4.0551	1.6142	2.4409	UC 319	T 319	24.9
		95	46	31	165	106	57	180	35	240	270	322	110	72	125	197	103	41	62			
UCT 320		100	1 7/8	1 1/4	6 7/8	4 17/32	2 21/64	7 7/8	1 3/8	10 15/64	11 13/32	13 19/32	4 23/32	2 15/16	5 15/16	8 9/32	4.2519	1.6535	2.5984	UC 320	T 320	30.7
320-64	4		48	32	175	115	59	200	35	260	290	345	120	75	135	210	108	42	66	320-64		
UCT 322		110	2 1/16	1 1/2	6 9/32	4 29/32	2 9/16	8 15/32	1 1/2	11 7/32	12 19/32	15 5/32	5 1/8	3 5/32	5 29/32	9/14	4.6063	1.8110	2.7953	UC 322	T 322	39.7
			52	38	185	125	65	215	38	285	320	385	130	80	150	235	117	46	71			
UCT 324		120	2 3/8	1 21/32	8 9/32	5 1/2	2 3/4	9 1/16	1 49/64	12 19/32	13 31/32	17	5 1/2	3 17/32	6 1/2	10 1/2	4.9606	2.0079	2.9527	UC 324	T 324	54.4
			60	42	210	140	70	230	45	320	355	432	140	90	165	267	126	51	75			
UCT 326		130	2 9/16	1 25/32	8 21/32	5 29/32	2 61/64	9 7/16	1 31/32	13 25/32	15 5/32	18 5/16	5 29/32	3 15/16	7 3/32	11 7/32	5.3150	2.1260	3.1890	UC 326	T 326	69.3
			65	45	220	150	75	240	50	350	385	465	150	100	180	285	135	54	81			
UCT 328		140	2 3/4	1 31/32	9 1/16	6 5/16	3 5/32	10 1/32	1 31/32	14 61/64	16 11/32	20 9/32	6 3/32	3 15/16	7 7/8	12 13/32	5.7086	2.3228	3.3858	UC 328	T 328	85.1
			70	50	230	160	80	255	50	380	415	515	155	100	200	315	145	59	86			

Supporti auto-allineanti

UCPH 200 versione normale

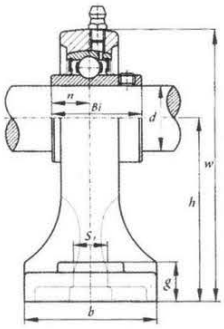

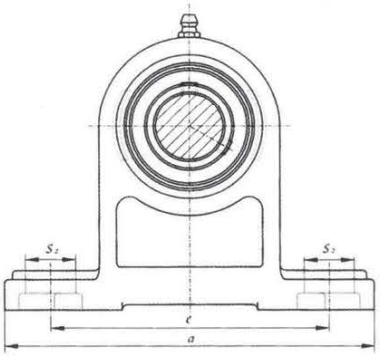

Bearing Unit No.	Shaft Dia. d (in.)	Shaft Dia. d (mm)	Dimensions (in.)or(mm) h	a	e	b	S2	S1	g	w	Bi	n	Bolt Used (mm)	Bolt Used (in.)	Bearing No.	Housing No.	Weight (kg)
UCPH 201		12	2 3/4	5	3 3/4	1 9/16	3/4	1 / 2	35/64	3 31/32	1.2205	0.5000	M10	3/8	UC 201	PH 201	0.96
201-8	1 / 2		70	127	95	40	19	13	15	101	31.0	12.7			201-8		
UCPH 202		15	2 3/4	5	3 3/4	1 9/16	3/4	1 / 2	35/64	3 31/32	1.2205	0.5000	M10	3/8	UC 202	PH 202	0.96
202-10	5/8		70	127	95	40	19	13	15	101	31.0	12.7			202-10		
UCPH 203		17	2 3/4	5	3 3/4	1 9/16	3/4	1 / 2	35/64	3 31/32	1.2205	0.5000	M10	3/8	UC 203	PH 203	0.96
203-11	3 11/16		70	127	95	40	19	13	15	101	31.0	12.7			203-11		
UCPH 204-12	3/4	20	2 3/4	5	3 3/4	1 9/16	3/4	1 / 2	35/64	3 31/32	1.2205	0.5000	M10	3/8	UC 204-12	PH 204	0.96
204			70	127	95	40	19	13	15	101	31.0	12.7			204		
UCPH 205-14	7/8														UC 205-14		
205-15	15/16		3 5/32	5 1/2	4 1/8	1 31/32	3/4	1 / 2	5/8	4 1/2	1.3425	0.5630	M10	3/8	205-15	PH 205	1.2
205		25	80	140	105	50	19	13	16	114	34.1	14.3			205		
205-16	1														205-16		
UCPH 206-18	1 1/8														UC 206-18		
206		30	3 35/64	6 1/2	4 3/4	1 31/32	13/16	21/32	23/32	5 1/8	1.5000	0.6260	M14	1 /2	206	PH 206	1.6
206-19	1 3/16		90	165	121	50	21	17	18	130	38.1	15.9			206-19		
206-20	1 1/4														206-20		
UCPH 207-20	1 1/4														UC 207-20		
207-21	1 5/16		3 47/64	6 9/16	5	2 3/8	13/16	21/32	23/32	5 1/2	1.6890	0.6890			207-21		
207-22	1 3/8		95	167	127	60	21	17	18	140	42.9	17.5	M14	1 /2	207-22	PH 207	2.0
207		35													207		
207-23	1 7/16														207-23		
UCPH 208-24	1 1/2		3 15/16	7 1/4	5 13/32	2 3/4	13/16	21/32	25/32	5 29/32	1.9370	0.7480			UC 208-24		
208-25	1 9/16		100	184	137	70	21	17	20	150	49.2	19	M14	1 /2	208-25	PH 208	2.7
208		40													208		
UCPH 209-26	1 5/8														UC 209-26		
209-27	1 11/16		4 9/64	7 15/32	5 3/4	2 3/4	13/16	21/32	25/32	6 7/32	1.9370	0.7480	M14	1 /2	209-27	PH 209	3.0
209-28	1 3/4		105	190	146	70	21	17	20	158	49.2	19			209-28		
209		45													209		
UCPH 210-30	1 7/8														UC 210-30		
210-31	1 15/16		4 21/32	8 1/8	6 1/4	2 3/4	7/8	25/32	7/8	6 1/2	2.0315	0.7480	M16	5/8	210-31	PH 210	3.5
210		50	110	206	159	70	22	20	22	165	51.6	19			210		
210-32	2														210-32		

CUSCINETTO CON ALLOGGIAMENTO
INSERT BEARING WITH HOUSING

UCPA 200 versione normale

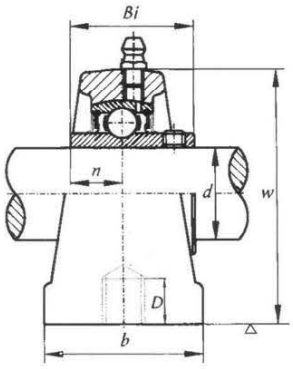

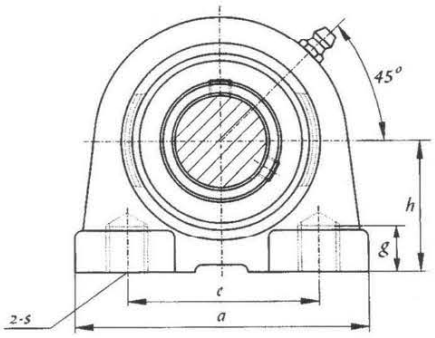

Bearing unit No.	Shaft Dia. d (in.)	Shaft Dia. d (mm)	Dimensions (in.)or(mm) h	a	e	b	s (mm)	g	w	D	Bi	n	Bolt size (mm)	Bearing No.	Housing No.	Weight (kg)
UCPA 201		12	1 3/16	3	2 3/64	1 9/16	10	7/16	2 7/16	1 /2	1.2205	0.5000	M10	UC 201	PA 201	0.64
201-8	1 / 2		30.2	76	52	40		11	62	13	31.0	12.7		201-8		
UCPA 202		15	1 3/16	3	2 3/64	1 9/16	10	7/16	2 7/16	1 /2	1.2205	0.5000	M10	UC 202	PA 202	0.64
202-10	5/8		30.2	76	52	40		11	62	13	31.0	12.7		202-10		
UCPA 203		17	1 3/16	3	2 3/64	1 9/16	10	7/16	2 7/16	1 /2	1.2205	0.5000	M10	UC 203	PA 203	0.64
203-11	11/16		30.2	76	52	40		11	62	13	31.0	12.7		203-11		
UCPA 204-12	3/4		1 3/16	3	2 3/64	1 9/16	10	7/16	2 7/16	1 /2	1.2205	0.5000	M10	UC 204-12	PA 204	0.64
204		20	30.2	76	52	40		11	62	13	31.0	12.7		204		
UCPA 205-14	7/8													UC 205-14		
205-15	15/16		1 7/16	3 5/16	2 13/64	1 25//32	10	15/32	2 27/32	1 /2	1.3386	0.5630	M10	205-15	PA 205	0.83
205		25	36.5	84	56	45		12	72	13	34	14.3		205		
205-16	1													205-16		
UCPA 206-18	1 1/8		1 11/16	3 11/16	2 19/32	1 31/32		15/32	3 5/16	23/32	1.5000	0.6260		UC 206-18		
206		30	42.9	94	66	50	14	12	84	18	38.1	15.9	M14	206	PA 206	1.2
206-19	1 3/16													206-19		
UCPA 207-20	1 1/4													UC 207-20		
207-21	1 5/16		1 7/8	4 11/32	3 5/32	2 5/32		1 / 2	3 3/4	25/32	1.6890	0.6890		207-21		
207-22	1 3/8		47.6	110	80	55	14	13	95	20	42.9	17.5	M14	207-22	PA 207	1.7
207		35												207		
207-23	1 7/16													207-23		
UCPA 208-24	1 1/2		1 15/16	4 9//16	3 5/16	2 9/32		1 / 2	3 3/4	25/32	1.9370	0.7480		UC 208-24		
208-25	1 9/16		49.2	116	84	58	14	13	100	20	49.2	19	M14	208-25	PA 208	2.0
208		40												208		
UCPA 309-26	1 5/8													UC 209-26		
209-27	1 11/16		2 9/64	4 23/32	3 35/64	2 3/8	14	1 /2	4 1/4	1	1.9370	0.7480	M14	209-27	PA 209	2.2
209-28	1 3/4		54.2	120	90	60		13	100	25	49.2	19		209-28		
209		45												209		
UCPA 210-30	1 7/8													UC 210-30		
210-31	1 15/16		2 1/14	5 1/8	3 45/64	2 17/32	16	9/16	4 9/16	1	2.0315	0.7480	M16	210-31	PA 210	2.8
210		50	57.5	130	94	64		14	116	25	51.6	19		210		
210-32	2													210-32		

Supporti auto-allineanti

UCFA 200 versione normale

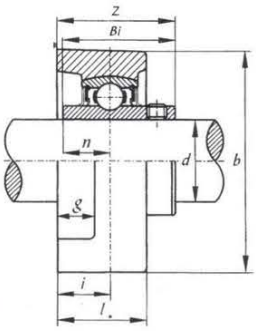

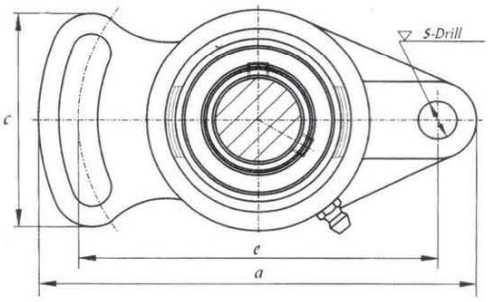

Bearing Unit No.	Shaft Dia. d (in.)	Shaft Dia. d (mm)	Dimensions (in.)or(mm) a	e	l	g	l	s	b	z	c	Bi	n	Bolt Used (mm)	Bolt Used (in.)	Bearing No.	Housing No.	Weight (kg)
UCFA 201		12	3 27/32	3 5/64	19/32	7/16	1 1/25	25/64	2 23/64	1 5/16	1 31/32	1.2205	0.5000	M8	5/16	UC 201	FA 201	0.47
201-8	1 / 2		98	78	15	11	25.5	10	60	33.3	50	31.0	12.7			201-8		
UCFA 202		15	3 27/32	3 5/64	19/32	7/16	1 1/25	25/64	2 23/64	1 5/16	1 31/32	1.2205	0.5000	M8	5/16	UC 202	FA 202	0.47
202-10	5/8		98	78	15	11	25.5	10	60	33.3	50	31.0	12.7			202-10		
UCFA 203		17	3 27/32	3 5/64	19/32	7/16	1 1/25	25/64	2 23/64	1 5/16	1 31/32	1.2205	0.5000	M8	5/16	UC 203	FA 203	0.47
203-11	11/16		98	78	15	11	25.5	10	60	33.3	50	31.0	12.7			203-11		
UCFA 204-12	3/4		3 27/32	3 5/64	19/32	7/16	1 1/25	25/64	2 23/64	1 5/16	1 31/32	1.2205	0.5000	M8	5/16	UC 204-12	FA 204	0.47
204		20	98	78	15	11	25.5	10	60	33.3	50	31.0	12.7			204		
UCFA 205-14	7/8															UC 205-14		
205-15	15/16		4 7/8	3 55/64	5/8	33/64	1 1/16	15/32	2 3/4	1 13/32	2 9/16	1.3425	0.5630	M10	3/8	205-15	FA 205	0.68
205		25	124	98	16	13	27	12	70	35.7	65	34	14.3			205		
205-16	1															205-16		
UCFA 206-18	1 1/8															UC 206-18		
206		30	5 9/16	4 39/64	45/64	33/64	1 7/32	15/32	3 9/32	1 37/64	2 53/64	1.5000	0.6260	M10	3/8	206	FA 206	1.0
206-19	1 3/16		141	117	18	13	31	12	83	40.2	72	38.1	15.9			206-19		
206-20	1 1/4															206-20		
UCFA 207-20	1 1/4															UC 207-20		
207-21	1 5/16		6 3/32	5 1/8	3/4	9/16	1 11/32	35/64	3 25/32	1 3/4	3 15/64	1.6890	0.6890			207-21		
207-22	1 3/8		155	130	19	14	34	14	96	44.4	82	42.9	17.5	M12	7/16	207-22	FA 207	1.4
207		35														207		
207-23	1 7/16															207-23		
UCFA 208-24	1 1/2		6 23/32	5 43/64	53/ 64	9/16	1 27/64	35/64	4 1/8	2 1/64	3 27/64	1.9370	0.7480			UC 208-24		
208-25	1 9/16		171	144	21	16	36	14	105	51.2	87	49.2	19.0	M12	7/16	208-25	FA 208	1.7
208		40														208		
UCFA 209-26	1 5/8															UC 209-26		
209-27	1 11/16		7 1/6	5 53/64	55/64	9/16	1 1/2	41/64	4 3/8	2 1/16	3 35/64	1.9370	0.7480	M14	1 /2	209-27	FA 209	2.1
209-28	1 3/4		179	148	22	16	38	16	111	52.2	90	49.2	19			209-28		
209		45														209		
UCFA 210-30	1 7/8															UC 210-30		
210-31	1 15/16		7 7/16	6 3/16	55/64	9/16	1 37/64	41/64	4 9/16	2 5/32	3 45/64	2.0315	0.7480	M14	1 /2	210-31	FA 210	2.4
210		50	189	157	22	16	40	16	116	54.6	94	51.6	19			210		
210-32	2															210-32		
UCFA 211-32	2															UC 211-32		
211-34	2 1/8		8 1/2	7 1/4	63/64	5/8	1 11/6	41/64	5 1/4	2 19/64	4 3/32	2.1890	0.8740	M14	1 /2	211-34	FA 211	3.4
211		55	216	184	25	16	43	16	133	58.4	104	55.6	22.2			211		
211-35	2 3/16															211-35		

CUSCINETTO CON ALLOGGIAMENTO
INSERT BEARING WITH HOUSING

UCFB 200 (normal-duty)

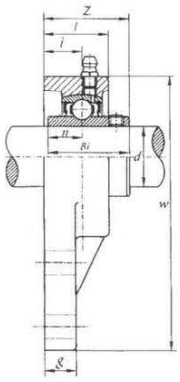

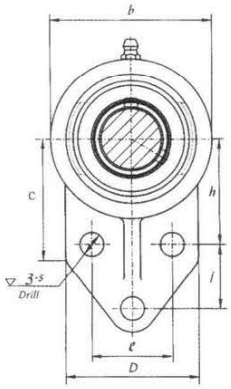

带座轴承代号 Bearing unit No.	轴径 Shaft Dia. d (in.)	(mm)	外形尺寸（英寸）或（毫米） Dimensions (in.)or(mm) w	b	c	D	l	s	g	h	j	e	l	z	Bi	n	螺栓 Bolt Used (mm)	(in.)	Bearing No.	Housing No.	重量 Weight (kg)
UCFB 201		12	4 11/32	2 7/16	2 1/16	2 1/16	1	25/64	1 /2	121/32	1 1/16		19/32	1 1/4	1.2205	0.5000	M8	5/16	UC 201	FB 201	0.64
201-8	1 / 2		110	62	52	52	25.5	10	13	42	27	32	15	31.8	31.0	12.7			201-8		
UCFB 202		15	4 11/32	2 7/16	2 1/16	2 1/16	1	25/64	1 /2	121/32	1 1/16		19/32	1 1/4	1.2205	0.5000	M8	5/16	UC 202	FB 202	0.64
202-10	5/8		110	62	52	52	25.5	10	13	42	27	32	15	31.8	31.0	12.7			202-10		
UC 203		17	4 11/32	2 7/16	2 1/16	2 1/16	1	25/64	1 /2	121/32	1 1/16		19/32	1 1/4	1.2205	0.5000	M8	5/16	UC 203	FB 203	0.64
203-11	11/16		110	62	52	52	25.5	10	13	42	27	32	15	31.8	31.0	12.7			203-11		
UC 204-12	3/4		4 11/32	2 7/16	2 1/16	2 1/16	1	25/64	1 /2	121/32	1 1/16		19/32	1 1/4	1.2205	0.5000	M8	5/16	UC 204-12	FB 204	0.64
204		20	110	62	52	52	25.5	1	13	42	27	32	15	31.8	31.0	12.7			204		
UC 205-14	7/8																		UC 205-14		
205-15	15/16		4 9/16	2 11/16	2 1/16	2 7/32	1 1/16	25/64	1 /2	1 49/64	1 1/16	1 11/32	5/8	1 3/8	1.3386	0.5630	M8	5/16	205-15	FB 205	0.68
205		25	116	68	52	56	27	10	13	45	27	34	16	34.7	34	14.3			205		
205-16	1																		205-16		
UC 206-18	1 1/8																		UC 206-18		
206		30	5 1/5	3 3/20	2 5/32	2 9/16	1 7/32	25/64	1 /2	1 31/32	1 9/64		45/64	1 17/32	1.5000	0.6260	M8	5/16	206	FB 206	0.92
206-19	1 3/16		132	80	55	65	31	10	13	50	32	40	18	39.2	38.1	15.9			206-19		
206-20	1 1/4																		206-20		
UC 207-20	1 1/4																		UC 207-20		
207-21	1 5/16		5 21/32	3 17/32	2 7/16	2 3/4	1 11/32	25/64	19/32	2 11/64	1 17/64		3/4	1 3/4	1.6890	0.6890			207-21		
207-22	1 3/8		144	90	62	70	34	10	15	55	32	46	19	44.4	42.9	17.5	M8	5/16	207-22	FB 207	1.3
207		35																	207		
207-23	1 7/16																		207-23		
UC 208-24	1 1/2		6 15/32	3 15/16	2 27/32	3 1/16	1 27/64	15/32	5/8	2 23/64	1 39/64		53/64	2 1/64	1.9370	0.7480			UC 208-24		
208-25	1 9/16		164	100	72	78	36	12	16	60	41	50	21	51.2	49.2	19	M10	3/8	208-25	FB 208	1.8
208		40																	208		
UC 309-26	1 5/8																		UC 209-26		
209-27	1 11/16		6 9/10	4 3/16	3	3 5/32	1 1/2	15/32	23/32	2 9/16	1 11/16	2 1/8	55/64	2 1/16	1.9370	0.7480	M10	3/8	209-27	FB 209	2.0
209-28	1 3/4		175	106	76	80	38	12	18	65	43	54	22	52.2	49.2	19			209-28		
209		45																	209		
UC 210-30	1 7/8																		UC 210-30		
210-31			7 1/14	4 15/31	3 7/32	3 3/8	1 37/64	15/32	23/32	2 43/64	1 13/16	2 9/32	55/64	2 5/32	2.0315	0.7480	M10	3/8	210-31	FB 210	2.3
210		50	184	114	82	86	40	12	18	68	46	58	22	54.6	51.6	19			210		
210-32	2																		210-32		

Supporti auto-allineanti

“La reputazione deriva dalla qualità”
L’azienda attribuisce grande importanza alla cooperazione con i clienti, garantisce la qualità e il servizio, conquistando la fiducia e supportando i clienti.

"Invite customers from all over the world, reputation comes from quality.". For a long time, the company attaches great importance to the friendly cooperation with customers, guarantees the quality and service, cherishes the honor, thus winning the trust and support of customers. Extensive cooperation with friends and sharing prosperity has become our most sincere pursuit.

SUPPORTO IN GHISA PER CUSCINETTI
CAST IRON BEARING SUPPORT

serie SN 200
SN 200 series

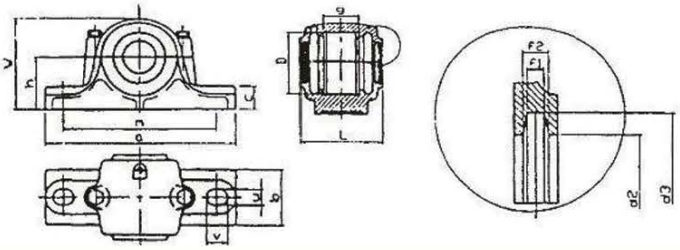

Supporti	d	d1	H8	a	b	c	H12	h12	L	w	m	u	v	H12	H12	H13	f2	KG	Cusc. compatibili	
SN205	25	30	52	165	46	22	25	40	67	75	130	15	20	31.5	43	4	5.4	1.4	1205 2205	 22205
SN206	30	35	62	185	52	22	30	50	77	90	150	15	20	36.5	48	4	5.4	1.9	1206 2206	 22206
SN207	35	45	72	185	52	22	33	50	82	95	150	15	20	46.5	58	4	5.4	2	1207 2207	 22207
SN208	40	50	80	205	60	25	33	60	85	110	170	15	20	51.5	67	5	6.9	3	1208 2208	 22208
SN209	45	55	85	205	60	25	31	60	85	112	170	15	20	56.5	72	5	6.9	3.2	1209 2209	 22209
SN210	50	60	90	205	60	25	33	60	90	115	170	15	20	62	77	5	6.8	3.4	1210 2210	 22210
SN211	55	65	100	255	70	28	33	70	95	130	210	18	23	67	82	5	6.8	4.5	1211 2211	 22211
SN212	60	70	110	255	70	30	38	70	105	135	210	18	23	72	89	6	8.1	5	1212 2212	 22212
SN213	65	75	120	275	80	30	43	80	110	150	230	18	23	77	94	6	8.1	5.4	1213 2213	 22213
SN214	70	80	125	275	80	30	44	80	115	155	230	18	23	82	99	6	8.1	6.1	1214 2214	 22214
SN215	75	85	130	280	80	30	41	80	115	155	230	18	23	87	104	6	8.1	7.4	 2215	 22215
SN216	80	90	140	315	90	32	43	95	120	175	260	22	27	92	111	7	9.3	9.5	1216 2216	 22216
SN217	85	95	150	320	90	32	46	95	125	185	260	22	27	97	116	8	10.8	10	1217 2217	 22217
SN218	90	100	160	345	100	35	62.4	100	145	195	290	22	27	102	125	8	10.7	12.8	1218 2218	 22218 23218
SN219	95	110	170	345	100	35	53	112	140	210	290	22	27	113	135	8	10.7	17.8	1219 2219	 22219
SN220	100	115	180	380	110	40	70.3	112	160	218	320	26	32	118	140	9	12.2	19	1220 2220	 22220 23220
SN222	110	125	200	410	120	45	80	125	175	240	350	26	32	128	154	9	12.2	23	1222 2222	 22222 23222
SN224	120	135	215	410	120	45	86	140	185	270	350	26	32	138	164	10	13.7	25		22224 23224
SN226	130	145	230	445	130	50	90	150	190	290	380	28	36	148	174	10	13.7	28		22226 23226
SN228	140	155	250	500	150	50	98	150	205	305	420	33	42	158	184	10	13.7	36		22228 23228
SN230	150	165	270	530	160	60	106	160	220	325	450	33	42	168	194	10	13.7	45.5		22230 23230
SN232	160	175	290	550	160	60	114	170	235	345	470	33	42	178	204	10	13.7	56.5		22232 23232

Supporti in ghisa per cuscinetti

serie SN 300

SN 300 series

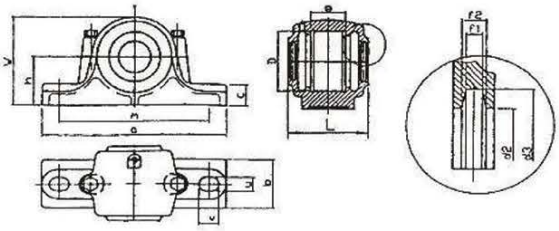

Supporti	d	d1	H8	a	b	c	H12	h12	L	w	m	u	v	H12	H12	H13	f2	KG	Cusc. compatibili	
SN305	25	30	62	185	52	22	34	50	80	90	150	15	20	31.5	43	4	5.4	1.6	1305	
																			2305	
SN306	30	35	72	185	52	22	37	50	82	95	150	15	20	36.5	48	4	5.4	1.9	1306	
																			2306	
SN307	35	45	80	205	60	25	41	60	90	110	170	15	20	46.5	58	4	5.4	2.6	1307	
																			2307	
SN308	40	50	90	205	60	25	43	60	95	115	170	15	20	51.5	67	4	5.4	3.2	1308	21308
																			2308	22308
SN309	45	55	100	255	70	28	46	70	105	130	210	18	23	56.5	72	5	6.9	4.5	1309	21309
																			2309	22309
SN310	50	60	110	255	70	30	50	70	115	135	210	18	23	62	77	5	6.9	5	1310	21310
																			2310	22310
SN311	55	65	120	275	80	30	53	80	120	150	230	18	23	67	82	5	6.8	6.6	1311	21311
																			2311	22311
SN312	60	70	130	280	80	30	56	80	125	155	230	18	23	72	89	5	6.8	7	1312	21312
																			2312	22312
SN313	65	75	140	315	90	32	58	95	130	175	260	22	27	77	94	6	8.1	8.8	1313	21313
																			2313	22313
SN314	70	80	150	320	90	32	61	95	130	185	260	22	27	82	99	6	8.1	10.3	1314	21314
																			2314	22314
SN315	75	85	160	345	100	35	65	100	140	195	290	22	27	87	104	6	8.1	11.4	1315	21315
																			2315	22315
SN316	80	90	170	345	100	35	68	112	145	212	290	22	27	92	111	6	8.1	13	1316	21316
																			2316	22316
SN317	85	95	180	380	110	40	70	112	155	218	320	26	32	97	116	7	9.3	16	1317	21317
																			2317	22317
SN318	90	100	190	400	110	33	74	112	160	230	320	26	35	102	125	8	10.8	22.8	1318	21318
																			2318	22318
SN319	95	110	200	420	120	36	77	125	170	245	350	26	35	113	135	8	10.7	27.8	1319	21319
																			2319	22319
SN320	100	115	215	420	120	38	83	140	175	280	350	26	35	118	140	8	10.7	34	1320	21320
																			2320	22320
SN322	110	125	240	460	130	40	90	150	190	300	390	26	35	128	154	9	12.2	45	1322	21322
																			2322	22322
SN324	120	135	260	540	160	50	96	160	205	325	450	33	42	138	164	9	12.2	62		22324
SN326	130	150	280	560	160	50	103	170	215	350	470	33	42	153	183	10	13.7	68.8		22326
SN328	140	160	300	630	170	55	112	180	235	375	520	35	45	163	193	10	13.7	98		22328
SN330	150	170	320	680	180	55	118	190	245	395	560	35	45	173	203	10	13.7	116		22330
SN332	160	180	340	710	190	60	124	200	255	415	580	42	52	183	213	10	13.7	135		22332

SUPPORTO IN GHISA PER CUSCINETTI
CAST IRON BEARING SUPPORT

serie SN 500
SN 500 series

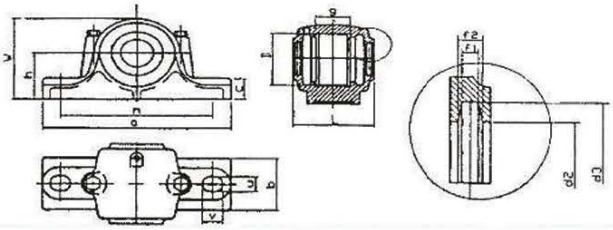

Support	d	H8	a	b	c	H12	h12	L	w	m	u	v	H12	H12	H13	f2		Cusc. compatibili		Bussole	
SN505	20	52	165	46	22	25	40	67	75	130	15	20	21.5	31	3	4.2	1.4	1205K		H205	HE205
																		2205K	22205K	H305	HE305
SN506	25	62	185	52	22	30	50	77	90	150	15	20	26.5	38	4	5.4	1.9	1206K		H206	HE206
																		2206K	22206K	H306	HE306
SN507	30	72	185	52	22	33	50	82	95	150	15	20	31.5	43	4	5.4	2	1207K		H207	HE207
																		2207K	22207K	H307	HE307
SN508	35	80	205	60	25	33	60	85	110	170	15	20	36.5	48	4	5.4	3.2	1208K		H208	HE208
																		2208K	22208K	H308	HE308
SN509	40	85	205	60	25	31	60	85	112	170	15	20	41.5	53	4	5.4	3	1209K		H209	HE209
																		2209K	22209K	H309	HE309
SN510	45	90	205	60	25	33	60	90	115	170	15	20	46.5	58	4	5.4	3.4	1210K		H210	HE210
																		2210K	22210K	H310	HE310
SN511	50	100	255	70	28	33	70	95	130	210	18	23	51.5	67	5	6.9	4.6	1211K		H211	HE211
																		2211K	22211K	H311	HE311
SN512	55	110	255	70	30	28	70	105	135	210	18	23	56.5	72	5	6.9	5	1212K		H212	HE212
																		2212K	22212K	H312	HE312
SN513	60	120	275	80	30	43	80	110	150	230	18	23	62	77	5	6.8	6.8	1213K		H213	HE213
																		2213K	22213K	H313	HE313
SN514			275	80	30	44	80	115	155	230	18				5	6.8		1214K		H214	HE214
																		2214K	22214K	H314	HE314
SN515	65	130	280	80	30	41	80	115	155	230	18	23	67	82	5	6.8	7.4	1215K		H215	HE215
																		2215K	22215K	H315	HE315
SN516	70	140	315	90	32	43	95	120	175	260	22	27	72	89	6	8.1	9.5	1216K		H216	HE216
																		2216K	22216K	H316	HE316
SN517	75	150	320	90	32	46	95	125	185	260	22	27	77	94	6	8.1	10	1217K		H217	HE217
																		2217K	22217K	H317	HE317
SN518	80	160	345	100	35	62.4	100	145	195	290	22	27	82	99	6	8.1	12.8	1218K		H218	HE218
																		2218K	22218K	H318	HE318
																			23218K	H2318	HE2318
SN519	85	170	345	100	35	53	112	140	210	290	22	27	87	104	6	8.1	15.4	1219K		H219	HE219
																		2219K	22219K	H319	HE319
SN520	90	180	380	110	40	70.3	112	160	218	320	26	32	92	111	7	9.3	17.8	2220K	22220K	H320	HE320
																			23220K	H2320	HE2320
SN522	100	200	410	120	45	80	125	175	240	350	26	32	102	125	8	10.8	19	2222K	22222K	H322	HE322
																			23222K	H2322	HE2322
SN524	110	215	410	120	45	86	140	185	270	350	26	32	113	135	8	10.7	26		22224K	H3124	HE3124
																			23224K	H2324	HE2324
SN526	115	230	445	130	50	90	150	190	290	380	28	36	118	140	8	10.7	32		22226K	H3126	HE3126
																			23226K	H2326	HE2326
SN528	125	250	500	150	50	98	150	205	305	420	33	42	128	154	9	12.2	40		22228K	H3128	HE3128
																			23228K	H2328	HE2328
SN530	135	270	530	160	60	106	160	220	325	450	33	42	138	164	9	12.2	47.2		22230K	H3130	HE3130
																			23230K	H2330	HE2330
SN532	140	290	550	160	60	114	170	235	345	470	33	42	143	173	10	13.7	56.5		22232K	H3132	HE3132
																			23232K	H2332	HE2332

Supporti in ghisa per cuscinetti

serie **SN 600**
SN 600 series

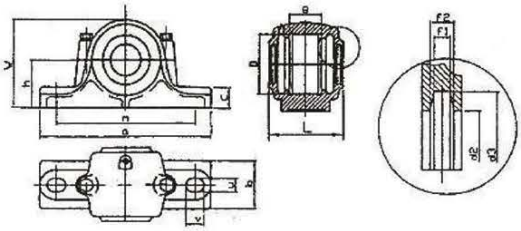

Supporti	d	H8	a	b	c	H12	h12	L	w	m	u	v	H12	H12	H13	f2		Cusc. compatibili		Bussole	
SN605	20	62	185	52	22	34	50	80	90	150	15	20	21.5	31	3	4.2	2.1	1305K		H305	HE305
																		2305K		H2305	HE2305
SN606	25	72	185	52	22	37	50	82	95	150	15	20	26.5	38	4	5.4	2.8	1306K		H306	HE306
																		2306K		H2306	HE2306
SN607	30	80	205	60	25	41	60	90	110	170	15	20	31.5	43	4	5.4	3.5	1307K		H307	HE307
																		2307K		H2307	HE2307
SN608	35	90	205	60	25	43	60	95	115	170	15	20	36.5	48	4	5.4	4.2	1308K	21308K	H308	HE308
																		2308K	22308K	H2308	HE2308
SN609	40	100	255	70	28	46	70	105	130	210	15	20	41.5	53	4	5.4	5	1309K	21309K	H309	HE309
																		2309K	22309K	H2309	HE2309
SN610	45	110	255	70	30	50	70	115	135	210	18	23	46.5	58	4	5.4	6.1	1310K	21310K	H310	HE310
																		2310K	22310K	H2310	HE2310
SN611	50	120	275	80	30	53	80	120	150	230	18	23	51.5	67	5	6.9	6.5	1311K	21311K	H311	HE311
																		2311K	22311K	H2311	HE2311
SN612	55	130	280	80	30	56	80	125	155	230	18	23	56.5	72	5	6.9	7.9	1312K	21312K	H312	HE312
																		2312K	22312K	H2312	HE2312
SN613	60	140	315	90	32	58	95	130	175	260	22	27	62	77	5	6.8	10.8	1313K	21313K	H313	HE313
																		2313K	22313K	H2313	HE2313
SN614		150	320	90	32	61	95	130	185	260	22	27			5	6.8		1314K	21314K	H314	HE314
																		2314K	22314K	H2314	HE2314
SN615	65	160	345	100	35	65	100	140	195	290	22	27	67	82	5	6.8	14.6	1315K	21315K	H315	HE315
																		2315K	22315K	H2315	HE2315
SN616	70	170	345	100	35	68	112	145	212	290	22	27	72	89	6	8.1	17.1	1316K	21316K	H316	HE316
																		2316K	22316K	H2316	HE2316
SN617	75	180	380	110	40	70	112	155	218	320	26	32	77	94	6	8.1	18.7	1317K	21317K	H317	HE317
																		2317K	22317K	H2317	HE2317
SN618	80	190	400	110	33	74	112	160	230	320	26	35	82	99	6	8.1	21.1	1318K		H318	HE318
																		2318K	22318K	H2318	HE2318
SN619	85	200	420	120	36	77	125	170	245	350	26	35	87	104	6	8.1	25.5	1319K		H319	HE319
																		2319K	22319K	H2319	HE2319
SN620	90	215	420	120	38	83	140	175	280	350	26	35	92	111	7	9.3	31	1320K		H320	HE320
																		2320K	22320K	H2320	HE2320
SN622	100	240	460	130	40	90	150	190	300	390	28	38	102	125	8	10.8	41.4	1322K		H322	HE322
																		2322K	22322K	H2322	HE2322
SN624	110	260	540	160	50	96	160	205	325	450	33	42	113	135	8	10.7	54.6		22324K	H2324	HE2324
SN626	115	280	560	160	50	103	170	215	350	470	33	42	118	140	8	10.7	67.2		22326K	H2326	HE2326
SN628	125	300	630	170	55	112	180	235	375	520	35	45	128	154	9	12.2	92.6		22328K	H2328	HE2328
SN630	135	320	680	180	55	118	190	245	395	560	35	45	138	164	9	12.2	101.5		22330K	H2330	HE2330
SN632	140	340	710	190	60	124	200	255	415	580	42	52	143	173	10	13.7	122.3		22332K	H2332	HE2332